Power Quality Network Analyzer

PQM-1000s

DELAB

features

- True RMS Measurement
- Waveform Display for Voltage and Current
- Graphical Phasor Display
- Harmonics Spectrum Bar Graph Display
- 4 Quadrant Energy Measurement
- Demand for kW, kVA and Ampere (Max, Previous, Rolling)
- Info / Event Summary Page Display
- Phase Supply LED Indicator
- Phase Rotation Indication
- Complies with IEC-61326-1
- External Plug-in Module for RS-485 Modbus RTU Model: A-01s (isolated type)

technical data

Network Type
3P4W, 3P3W, 3P3W (Aron)

Display Type
Graphical LCD with white LED backlit

Current Measurement

AC Input Range	: 0.005 ~ 6.500 A
Accuracy	: ± 0.5%
CT Range	: 0 ~ 10,000 / 5A
Burden	: < 0.1 VA at 5A

Voltage Measurement

AC Input Range	: 0~300 VLN , 0~500 VLL
Accuracy	: ± 0.5%
VT Range	: 1.0 ~ 2500.0 : 1

Power Measurement
Accuracy (W, Var, VA, PF, Cos φ) : ± 1.0%

Frequency Measurement

Range	: 45 ~ 65 Hz
Accuracy	: ± 0.1%

Energy Measurement (4 Quadrant)

Range	: 0.0 ~ 9,999,999,999.9 (kwh, kVArh, kVAh)

Communication

A-01s Plug in module (sold separately)	: Modbus RTU RS-485 (isolated type) with selectable baud rate (kbps) 0.6, 1.2, 2.4, 4.8, 9.6, 19.2, 38.4

Aux Power Supply

AC range	: 65 ~ 275 Vac, 45 ~ 65 Hz
DC range	: 90 ~ 300 Vdc
Consumption	: < 3VA

Mechanical

Operating Temp.	: -5°C ~ +55°C
IP Rating	: IP54 (front panel)
Installation	: Panel flush mount
Dimension (mm)	: 99.2 (h) x 99.2 (w) x 45 (d)
Weight	: approx. 310 gram

measured parameters

Voltage : V1, V2, V3, V12, V23, V31, V asymmetry

Current : I1, I2, I3, In

Power : P1, P2, P3, ΣP

Reactive Power : Q1, Q2, Q3, ΣQ

Apparent Power : S1, S2, S3, ΣS

Active Energy : Import and Export (kwh)

Reactive Energy : Inductive and Capacitive (kVarh)

Apparent Energy : (kVAh)

Frequency : Hz

Power Factor : PF1, PF2, PF3, PFavg

Displacement Power Factor:
Cos φ 1, Cos φ 2, Cos φ 3, Cos φ avg,
360° phasor angle measurement for
V1, V2, V3, I1, I2, I3, In

Max / Roll / Prev. Demand :
I1, I2, I3, Iavg, P1, P2, P3, ΣP, S1, S2, S3, ΣS

Harmonics:
1st to 31st (odd harmonics) for Voltage and Current

Total Harmonic Distortion : Voltage and Current

Min/Max events (V, I, thd-V, thd-I & P) with elapsed time for max

k-Factor measurement for Ampere :
kF1, kF2, kF3 (indicative)

Running Hours
Hour Run

casing dimension

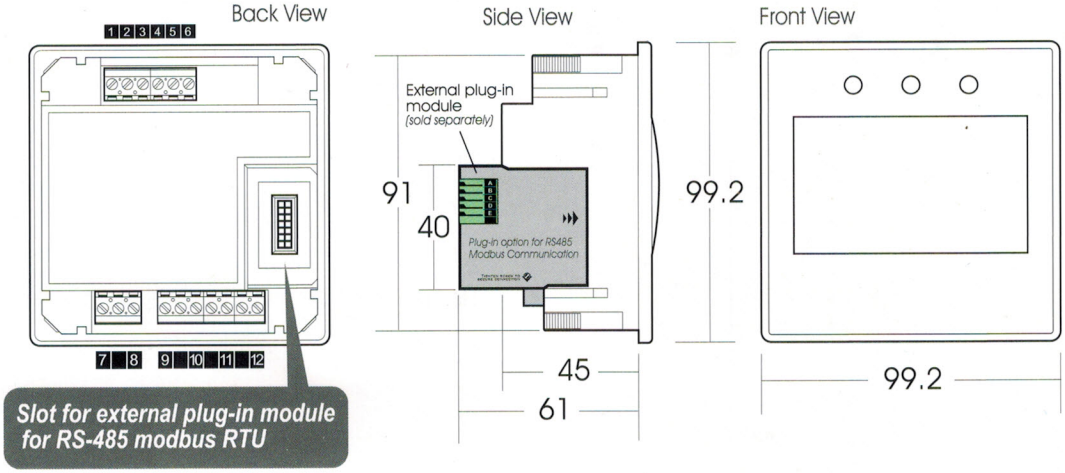

wiring diagram

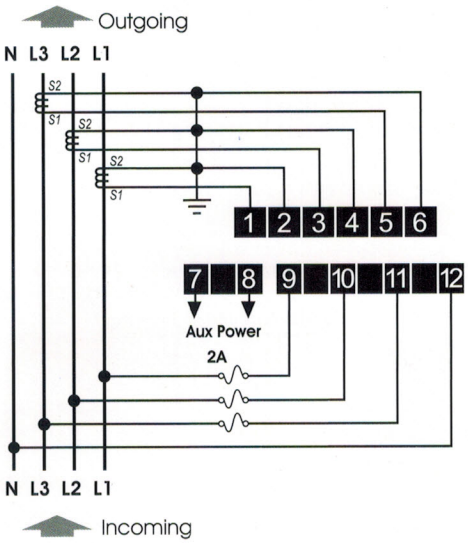

display : voltage & ampere waveform

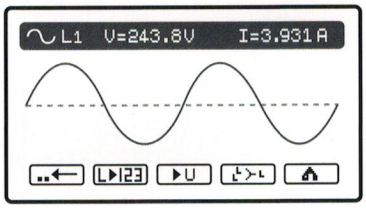

display: phasor angle definition

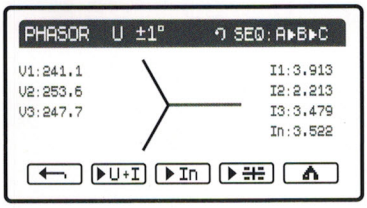

panel cut-out

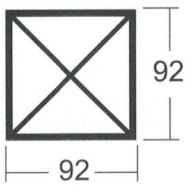

Panel Cut-out : 92 x 92

display : total harmonic distortion

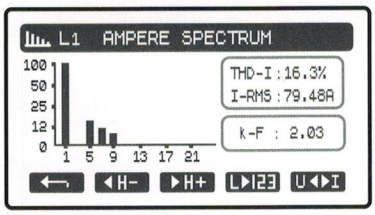

ordering information

Model	Description
PQM-1000s	65 ~ 275 Vac (45~65 Hz) 90~300 Vdc

IDMT

Combined Over Current & Earth Fault Relay

DP-34

DELAB

features

True RMS Measurement with SPARC[1] and DCOI[2] Algorithm

Auto / Manual Scroll for Real Time Display of Phase Current and Earth Fault in %

6 Selectable IDMT Graphs + 1 DTL

Fault / lo-set & hi-set Trip LED Indication

Fault Start Event Recording & LED Indication + Output[3]

Pre-Alarm LED Indication + Output[3]

Trip Event Memory (non-volatile 7 previous records for 3 phases + earth)

Fault Start Event Memory (non-volatile 4 previous records with phase info)

Programmable Relay Output Contacts for K2,K3*

Last Trip Elapsed Time (up to 99days)

Software Lock to Prevent Unauthorized Setting

Complies with IEC-60255-26 Standards

ANSI Code: 50P, 50G, 51P, 51G

External Plug-in Module for :-
A-01s (RS-485 MODBUS RTU) isolated type
A-02s (RS-485 MODBUS RTU+k3)*isolated type

technical data

Current Input (In)	: ../5A or ../1A
Frequency	: Software selectable 50 or 60 Hz
Burden	: <0.3 VA @ In
Output Relay Rating	: SPDT 5A, 250V AC/DC
Display	: 7-Segment LED (3 + 1digit)
Indication (LEDs)	: x10, pre-alarm, fault, fault start event, lo / hi trip
Operating Temp.	: 0°C ~ +55°C
Humidity	: 56 days at 93%RH, 40°C non-condensing
IP Rating	: IP54 (front panel)
Weight	: 275 g

aux power

DP-34-220a	:	65 ~ 275 Vac (45~65Hz), 90 ~ 300 Vdc
DP-34-024d	:	16 ~ 36 Vdc
Consumption	:	< 3VA

parameter setting

Phase OverCurrent

I_p> : lo-set	2% to 200% (step of 1%)
TM I_p> : lo-set time Multiplier	0.05 ~ 1.00 (step of 0.01, 5 IDMT + 1 DTL)
t_p> : lo-set trip delay time	0.03s ~ 20.0s 0.03s ~ 0.10s (step of 0.01s) 0.10s ~ 1.00s (step of 0.02s) 1.0s ~ 20.0s (step of 0.1s)
I_p >> : hi-set	OFF or 20% ~ 2000% 20% ~ 1000% (step of 10%) 1000% ~ 2000% (step of 100%)
t_p >> : hi-set trip delay time	0.03s ~ 20.0s (same range as t_p>)

Earth Fault

I_e >: lo-set	2% to 100% (step of 1%)
TM I_e > : lo-set time Multiplier	0.05 ~ 1.00 (step of 0.01, 5 IDMT + 1 DTL)
t_e > : lo-set trip delay time	0.03s ~ 20.0s 0.03s ~ 0.10s (step of 0.01s) 0.10s ~ 1.00s (step of 0.02s) 1.0s ~ 20.0s (step of 0.1s)
I_e >> : hi-set	OFF or 20% ~ 1000% (step of 10%)
t_e >> : hi-set trip delay time	0.03s ~ 0.5s

fundamental frequency

50 or 60Hz Selectable

K1 output contact options

Latching (Lc) or non-latching (nLc) trip

K2 output contact options

CbF (circuit breaker Failure - nLc only)
ALr (pre-fault 90% I_p>, 50% I_e>)
trP (tripping output - Lc or nLc)
Pht (Over Current Trip) Lc or nLC
EFt (Earth Fault Trip) Lc or nLc
AFS (all fault start signal - Lc or nLc)
dUF (device failure - Lc only)

[1]SPARC - sampling progressive algorithm for RMS Computation:
Computation of multiple rms values/cycle (Superior response in short circuit situation)

[2]DCOI - dc offset independent algorithm:
Cancels out dc signal caused by EMI and aging circuitry (Better Immunity against EMI)

[3]Output on k2 dependent on the programmed options

Note: Specification subject to change without prior notification (please visit www.delab.com.my for latest specification)

casing dimension

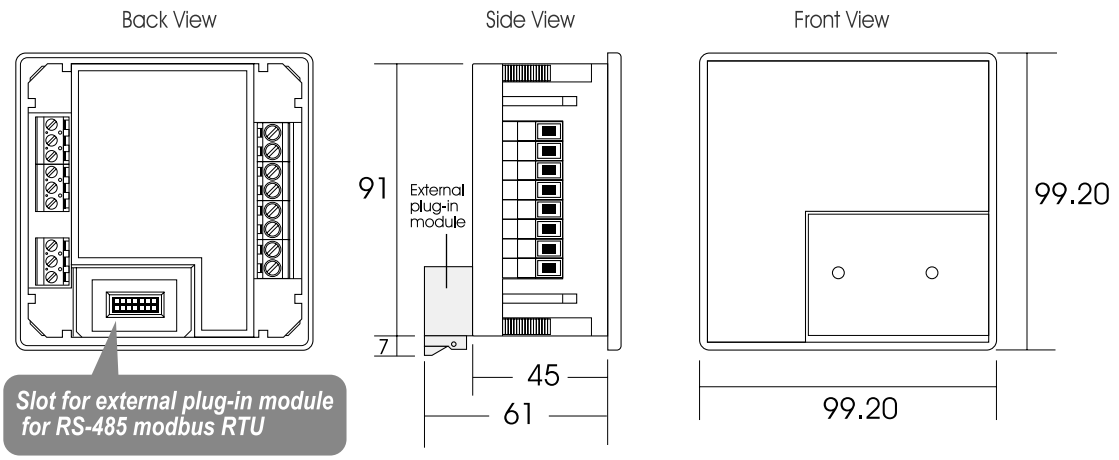

wiring diagram

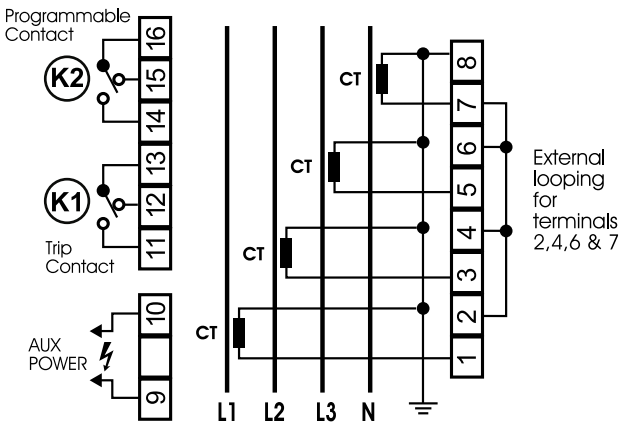

3P4W: CT x 4

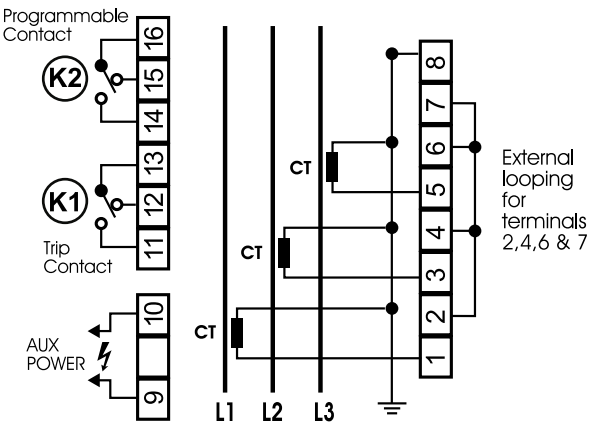

3P3W: CT x 3

panel cut-out

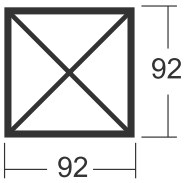

Panel Cut-out : 92 x 92

ordering information

► *Refer to page 26 for IDMT graphs*

Model	Description
DP-34-220a-5A	(CT.../5A) 65 ~ 275 Vac (45~65 Hz), 90~300 Vdc
DP-34-220a-1A	(CT.../1A) 65 ~ 275 Vac (45~65 Hz), 90~300 Vdc
DP-34-024d-5A	(CT.../5A) 16~36 Vdc
DP-34-024d-1A	(CT.../1A) 16~36 Vdc

Note: All measurement in mm.

IDMT Over Current Relay
DP-33

DELAB

features

- True RMS Measurement with SPARC[1] and DCOI[2] Algorithm
- Auto / Manual Scroll for Real Time Display of Phase Current
- 6 Selectable IDMT Graphs + 1 DTL
- Fault / lo-set & hi-set Trip LED Indication
- Fault Start Event Recording & LED Indication + Output[3]
- Pre-Alarm LED Indication + Output[3]
- Trip Event Memory (non-volatile 7 previous records for all phases)
- Fault Start Event Memory (non-volatile 4 previous records with phase info)
- Programmable Relay Output Contact for K2
- Last Trip Elapsed Time (up to 99days)
- Software Lock to Prevent Unauthorized Setting
- Complies with IEC-60255-26 Standards
- ANSI Code: 50P, 51P
- External Plug-in Module for :- A-01s (RS-485 MODBUS RTU) isolated type

technical data

Current Input (In)	: ../5A or ../1A
Frequency	: Software selectable 50 or 60 Hz
Burden	: <0.3 VA @ In
Output Relay Rating	: SPDT 5A, 250V AC/DC
Display	: 7-Segment LED (3 + 1digit)
Indication (LEDs)	: x10, pre-alarm, fault, fault start event, lo / hi trip
Operating Temp.	: 0°C ~ +55°C
Humidity	: 56 days at 93%RH, 40°C non-condensing
IP Rating	: IP54 (front panel)
Weight	: 260 g

parameter setting

I>: lo-set	2% ~ 200% (step of 1%)
TM >: lo-set time Multiplier	0.05 ~ 1.00 (step of 0.01, 5 IDMT + 1 DTL)
t>: lo-set trip delay time	0.03s~20.0s 0.03s~0.10s (step of 0.01s) 0.10s~1.00s (step of 0.02s) 1.0s~20.0s (step of 0.1s)
I>>: hi-set	OFF or 20%~2000% 20%~1000% (step of 10%) 1000%~2000% (step of 100%)
t>>: hi-set trip delay time	0.03s~0.5s

aux power

DP-33-220a	: 65 ~ 275 Vac (45~65Hz), 90 ~ 300 Vdc
DP-33-024d	: 16 ~ 36 Vdc
Consumption	: < 3VA

fundamental frequency

50 or 60Hz Selectable

K1 output contact options

Latching (Lc) or non-latching (nLc) trip

K2 output contact options

CbF (circuit breaker Failure - nLc only)
A50 (pre-fault 50% of I> - Lc or nLc)
A90 (pre-fault 90% of I> - Lc or nLc)
trP (tripping output - Lc or nLc)
LFS (lo fault start signal - Lc or nLc)
HFS (hi fault start signal - Lc or nLc)
AFS (all fault start signal - Lc or nLc)
dUF (device failure - Lc only)

[1]SPARC - sampling progressive algorithm for RMS Computation:
Computation of multiple rms values/cycle (Superior response in short circuit situation)

[2]DCOI - dc offset independent algorithm:
Cancels out dc signal caused by EMI and aging circuitry (Better Immunity against EMI)

[3]Output on k2 dependent on the programmed options

Note: Specification subject to change without prior notification (please visit www.delab.com.my for latest specification)

casing dimension

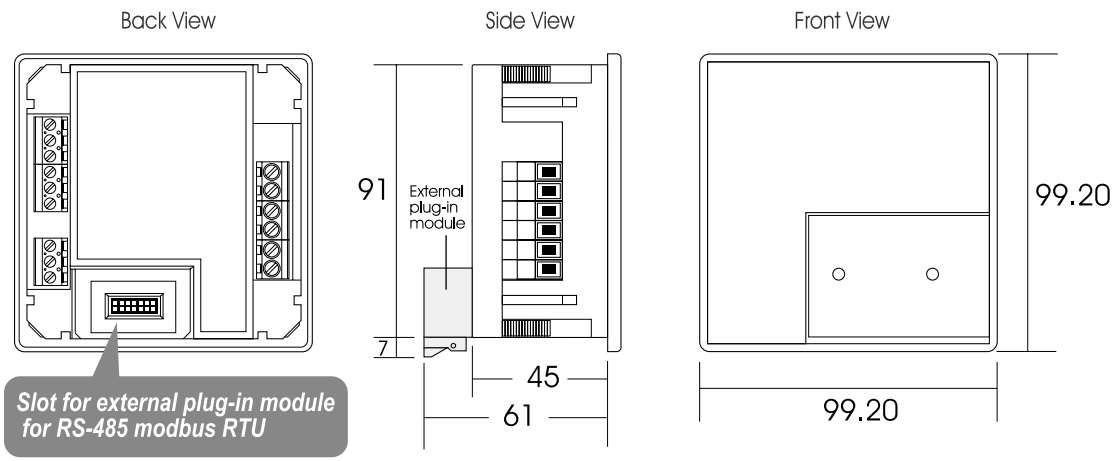

wiring diagram

When used without Earth Fault Relay

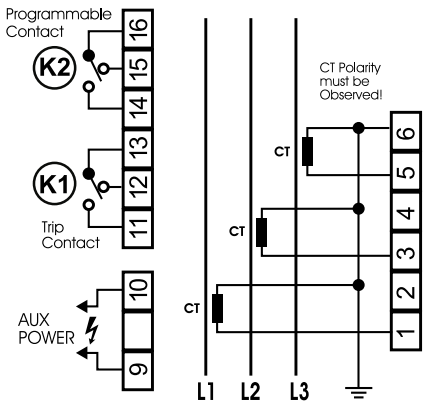

3P3W: CT x 3

CT connection when used with Earth Fault Relay

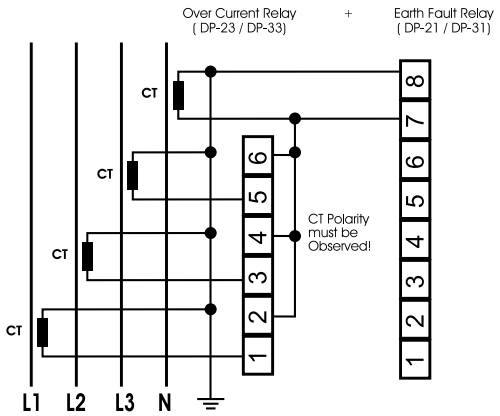

3P4W: CT x 4

panel cut-out

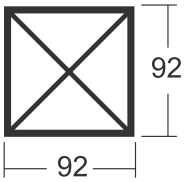

Panel Cut-out : 92 x 92

ordering information

► *Refer to page 26 for IDMT graphs*

Model	Description
DP-33-220a-5A	(CT.../5A) 65 ~ 275 Vac (45~65 Hz), 90~300 Vdc
DP-33-220a-1A	(CT.../1A) 65 ~ 275 Vac (45~65 Hz), 90~300 Vdc
DP-33-024d-5A	(CT.../5A) 16~36 Vdc
DP-33-024d-1A	(CT.../1A) 16~36 Vdc

Note: All measurement in mm.

1 LTI inverse + 1definite time delay

Over Current Relay

DP-23

DELAB

features

- True RMS Measurement with SPARC[1] and DCOI[2] Algorithm
- Auto / Manual Scroll for Real Time Display of Phase Current
- 1 LTI Inverse + 1 Definite Time Delay
- Fault / lo-set & hi-set Trip LED Indication
- Fault Start Event Recording & LED Indication + Output[3]
- Pre-Alarm LED Indication + Output[3]
- Trip Event Memory (non-volatile 7 previous records for all phases)
- Fault Start Event Memory (non-volatile 4 previous records with phase info)
- Programmable Relay Output Contact for K2
- Last Trip Elapsed Time (up to 99days)
- Software Lock to Prevent Unauthorized Setting
- Complies with IEC-60255-26 Standards
- ANSI Code: 50P, 51P
- External Plug-in Module for :- A-01s (RS-485 MODBUS RTU) isolated type

technical data

Current Input (In)	: ../5A or ../1A
Frequency	: Software selectable 50 or 60 Hz
Burden	: <0.3 VA @ In
Output Relay Rating	: SPDT 5A, 250V AC/DC
Display	: 7-Segment LED (3 + 1digit)
Indication (LEDs)	: x10, pre-alarm, fault, fault start event, lo / hi trip
Operating Temp.	: 0°C ~ +55°C
Humidity	: 56 days at 93%RH, 40°C non-condensing
IP Rating	: IP54 (front panel)
Weight	: 260 g

parameter setting

I>: lo-set	2% ~ 200% (step of 1%)
TM >: lo-set time Multiplier	0.05 ~ 1.00 (step of 0.01, 1 LTI + 1 DTL)
t>: lo-set trip delay time	0.03s~20.0s 0.03s~0.10s (step of 0.01s) 0.10s~1.00s (step of 0.02s) 1.0s~20.0s (step of 0.1s)
I>>: hi-set	OFF or 20%~2000% 20%~1000% (step of 10%) 1000%~2000% (step of 100%)
t>>: hi-set trip delay time	0.03s~0.5s

aux power

DP-23-220a	: 65 ~ 275 Vac (45~65Hz), 90 ~ 300 Vdc
DP-23-024d	: 16 ~ 36 Vdc
Consumption	: < 3VA

fundamental frequency

50 or 60Hz Selectable

K1 output contact options

Latching (Lc) or non-latching (nLc) trip

K2 output contact options

CbF (circuit breaker Failure - nLc only)
A50 (pre-fault 50% of I> - Lc or nLc)
A90 (pre-fault 90% of I> - Lc or nLc)
trP (tripping output - Lc or nLc)
LFS (lo fault start signal - Lc or nLc)
HFS (hi fault start signal - Lc or nLc)
AFS (all fault start signal - Lc or nLc)
dUF (device failure - Lc only)

[1]SPARC - sampling progressive algorithm for RMS Computation:
Computation of multiple rms values/cycle (Superior response in short circuit situation)

[2]DCOI - dc offset independent algorithm:
Cancels out dc signal caused by EMI and aging circuitry (Better Immunity against EMII)

[3]Output on k2 dependent on the programmed options

Note: Specification subject to change without prior notification (please visit www.delab.com.my for latest specification)

casing dimension

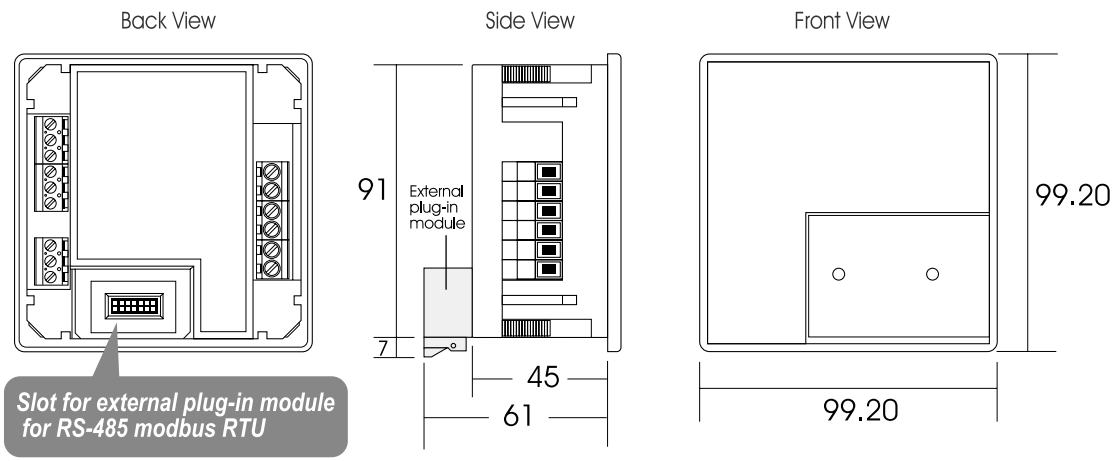

wiring diagram

When used without Earth Fault Relay

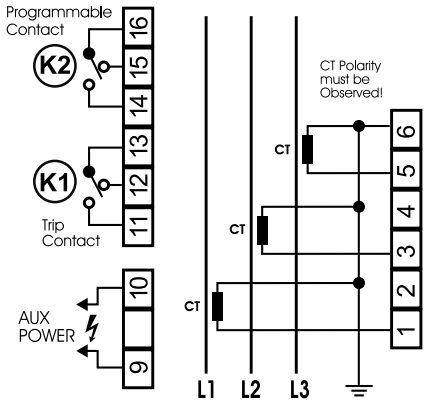

3P3W: CT x 3

CT connection when used with Earth Fault Relay

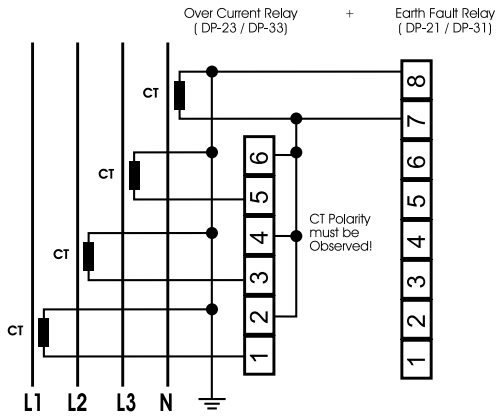

3P4W: CT x 4

panel cut-out

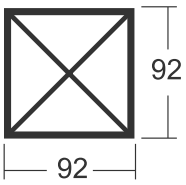

Panel Cut-out : 92 x 92

ordering information

► *Refer to page 26 for IDMT graphs*

Model	Description
DP-23-220a-5A	(CT.../5A) 65 ~ 275 Vac (45~65 Hz), 90~300 Vdc
DP-23-220a-1A	(CT.../1A) 65 ~ 275 Vac (45~65 Hz), 90~300 Vdc
DP-23-024d-5A	(CT.../5A) 16~36 Vdc
DP-23-024d-1A	(CT.../1A) 16~36 Vdc

Note: All measurement in mm.

IDMT Earth Fault Relay

DP-31

DELAB

features

- True RMS Measurement with SPARC[1] and DCOI[2] Algorithm
- Fundamental Signal Detection[3]
- Real Time Display of Earth Fault in %
- 6 Selectable IDMT Graphs + 1 DTL
- Fault / lo-set & hi-set Trip LED Indication
- Fault Start Event Recording & LED Indication + Output[4]
- Pre-Alarm LED Indication + Output[4]
- Trip Event Memory (non-volatile 7 previous records)
- Fault Start Event Memory (non-volatile 4 previous records)
- Programmable Relay Output Contacts
- Last Trip Elapsed Time (up to 99days)
- Software Lock to Prevent Unauthorized Setting
- Complies with IEC-60255-26 Standards
- ANSI Code: 50N, 51N
- External Plug-in Module for :- A-01s (RS-485 MODBUS RTU) isolated type

technical data

Current Input (In)	: ../5A or ../1A
Frequency	: Software selectable 50 or 60 Hz
Burden	: <0.3 VA @ In
Output Relay Rating	: SPDT 5A, 250V AC/DC
Display	: 7-Segment LED (3 + 1digit)
Indication (LEDs)	: mA, pre-alarm, fault, fault start event, lo / hi trip
Operating Temp.	: 0°C ~ +55°C
Humidity	: 56 days at 93%RH, 40°C non-condensing
IP Rating	: IP54 (front panel)
Weight	: 230 g

aux power

DP-31-220a	:	65 ~ 275 Vac (45~65Hz), 90 ~ 300 Vdc
DP-31-024d	:	16 ~ 36 Vdc
Consumption	:	< 3VA

fundamental frequency

50 or 60Hz Selectable

parameter setting

I>: lo-set	2% ~ 100% (step of 1%)
TM >: lo-set time Multiplier	0.05 ~ 1.00 (step of 0.01, 5 IDMT + 1 DTL)
t>: lo-set trip delay time	0.03s~20.0s 0.03s~0.10s (step of 0.01s) 0.10s~1.00s (step of 0.02s) 1.0s~20.0s (step of 0.1s)
I>>: hi-set	OFF or 20%~1000% (step of 10%)
t>>: hi-set trip delay time	0.03s~0.5s

K1 output contact options

Latching (Lc) or non-latching (nLc) trip

K2 output contact options

CbF (circuit breaker Failure - nLc only)
A50 (pre-fault 50% of I> - Lc or nLc)
A90 (pre-fault 90% of I> - Lc or nLc)
trP (tripping output - Lc or nLc)
LFS (lo fault start signal - Lc or nLc)
HFS (hi fault start signal - Lc or nLc)
AFS (all fault start signal - Lc or nLc)
dUF (device failure - Lc only)

[1]SPARC - sampling progressive algorithm for RMS Computation:
Computation of multiple rms values/cycle (Superior response in short circuit situation)

[2]DCOI - dc offset independent algorithm:
Cancels out dc signal caused by EMI and aging circuitry (Better Immunity against EMI)

[3]Fundamental Signal Detection:
To discriminate between signal and noise and eliminate nuisance tripping

[4]Output on k2 dependent on the programmed options

Note: Specification subject to change without prior notification (please visit www.delab.com.my for latest specification)

casing dimension

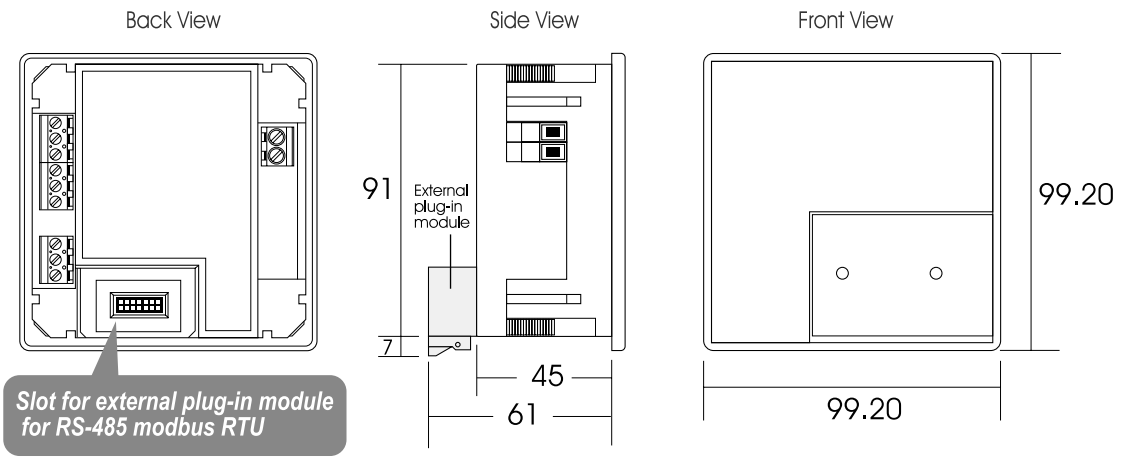

wiring diagram

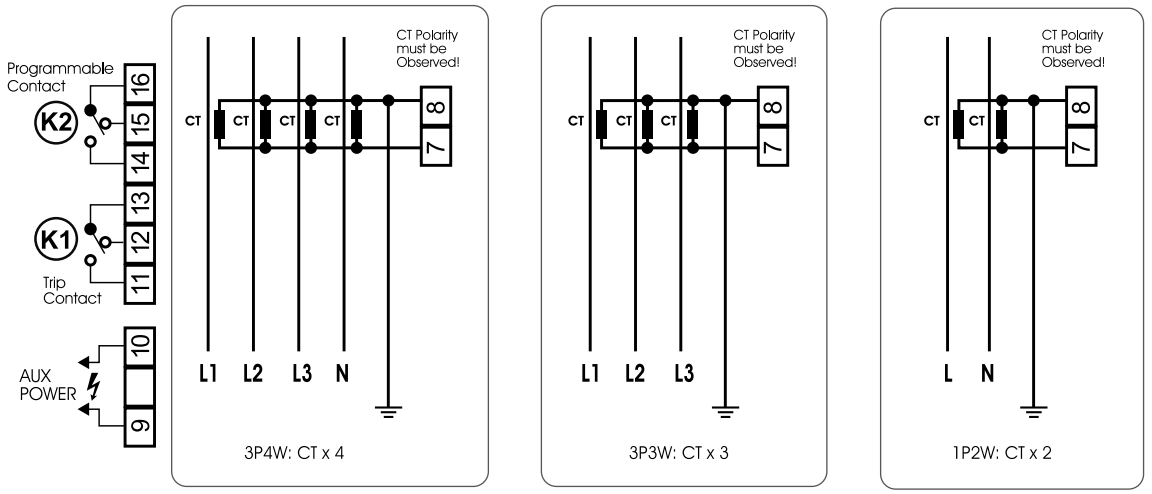

panel cut-out

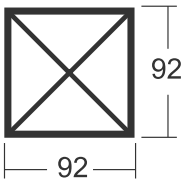

Panel Cut-out : 92 x 92

ordering information

► *Refer to page 26 for IDMT graphs*

Model	Description
DP-31-220a-5A	(CT.../5A) 65 ~ 275 Vac (45~65 Hz), 90~300 Vdc
DP-31-220a-1A	(CT.../1A) 65 ~ 275 Vac (45~65 Hz), 90~300 Vdc
DP-31-024d-5A	(CT.../5A) 16~36 Vdc
DP-31-024d-1A	(CT.../1A) 16~36 Vdc

Note: All measurement in mm.

DTL Earth Fault Relay

DP-21

DELAB

features

- True RMS Measurement with SPARC[1] and DCOI[2] Algorithm
- Fundamental Signal Detection[3]
- Real Time Display of Earth Fault in (%)
- Fault / lo-set & hi-set Trip LED Indication
- Fault Start Event Recording & LED Indication + Output[4]
- Pre-Alarm LED Indication + Output[4]
- Trip Event Memory (non-volatile 7 previous records)
- Fault Start Event Memory (non-volatile 4 previous records)
- Programmable Relay Output Contact for K2
- Last Trip Elapsed Time (up to 99days)
- Software Lock to Prevent Unauthorized Setting
- Complies with IEC-60255-26 Standards
- ANSII Code: 50N, 51N
- External Plug-in Module for :- A-01s (RS-485 MODBUS RTU) isolated type

technical data

Current Input (In)	: ../5A or ../1A
Frequency	: Software selectable 50 or 60 Hz
Burden	: <0.3 VA @ In
Output Relay Rating	: SPDT 5A, 250V AC/DC
Display	: 7-Segment LED (3 + 1digit)
Indication (LEDs)	: x10, pre-alarm, fault, fault start event, lo / hi trip
Operating Temp.	: 0°C ~ +55°C
Humidity	: 56 days at 93%RH, 40°C non-condensing
IP Rating	: IP54 (front panel)
Weight	: 230 g

aux power

DP-21-220a	: 65 ~ 275 Vac (45~65Hz), 90 ~ 300 Vdc
DP-21-024d	: 16 ~ 36 Vdc
Consumption	: < 3VA

fundamental frequency

50 or 60Hz Selectable

K1 output contact options

Latching (Lc) or non-latching (nLc) trip

parameter setting

I>: lo-set	2% ~ 100% (step of 1%)
t>: lo-set trip delay time	0.03s~20.0s 0.03s~0.10s (step of 0.01s) 0.10s~1.00s (step of 0.02s) 1.0s~20.0s (step of 0.1s)
I>>: hi-set	OFF or 20%~1000% (step of 10%)
t>>: hi-set trip delay time	fixed @ 30ms

K2 output contact options

CbF (circuit breaker Failure - nLc only)
A50 (pre-fault 50% of I> - Lc or nLc)
A90 (pre-fault 90% of I> - Lc or nLc)
trP (tripping output - Lc or nLc)
LFS (lo fault start signal - Lc or nLc)
HFS (hi fault start signal - Lc or nLc)
AFS (all fault start signal - Lc or nLc)
dUF (device failure - Lc only)

[1]SPARC - sampling progressive algorithm for RMS Computation:
Computation of multiple rms values/cycle (Superior response in short circuit situation)

[2]DCOI - dc offset independent algorithm:
Cancels out dc signal caused by EMI and aging circuitry (Better Immunity against EMI)

[3]Fundamental Signal Detection:
To discriminate between signal and noise and eliminate nuisance tripping

[4]Output on k2 dependent on the programmed options

Note: Specification subject to change without prior notification (please visit www.delab.com.my for latest specification)

casing dimension

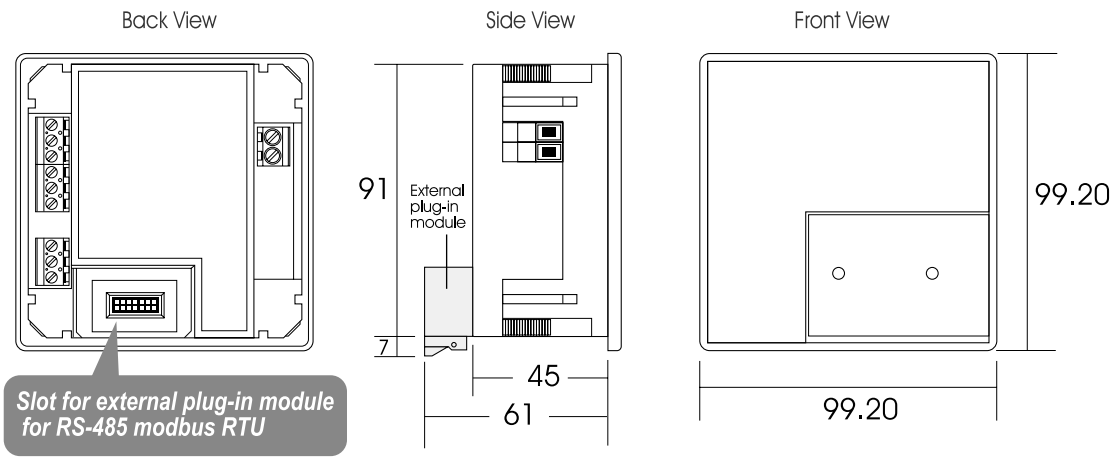

wiring diagram

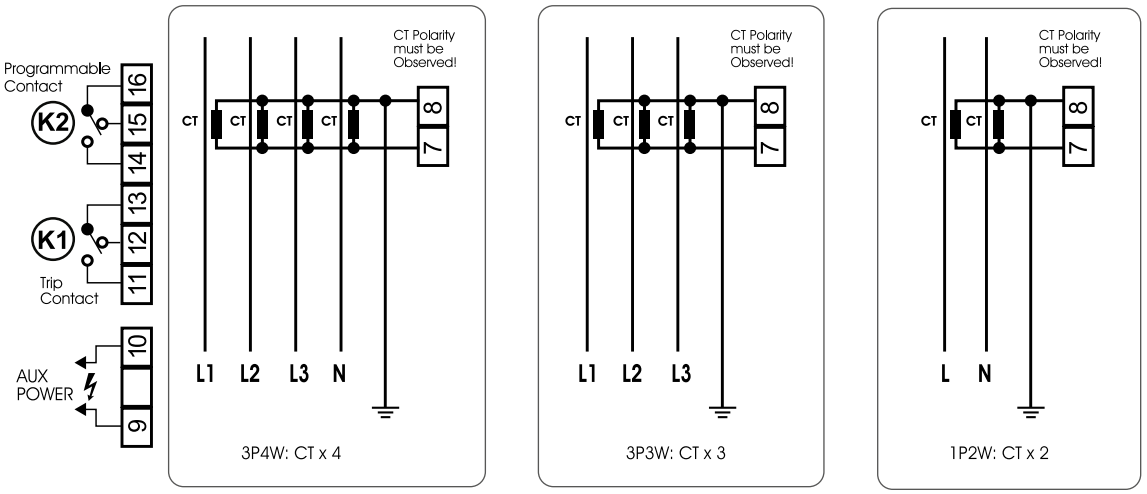

panel cut-out

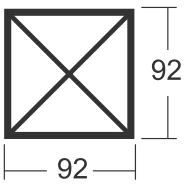

Panel Cut-out : 92 x 92

ordering information

Model	Description
DP-21-220a-5A	(CT.../5A) 65 ~ 275 Vac (45~65 Hz), 90~300 Vdc
DP-21-220a-1A	(CT.../1A) 65 ~ 275 Vac (45~65 Hz), 90~300 Vdc
DP-21-024d-5A	(CT.../5A) 16~36 Vdc
DP-21-024d-1A	(CT.../1A) 16~36 Vdc

Note: All measurement in mm.

Earth Leakage Relay
DP-10

DELAB

features

- True RMS Measurement with SPARC[1] and DCOI[2] Algorithm
- Fundamental Signal Detection[3]
- Real Time Display of IΔn in mA/A
- Fault / lo-set & hi-set Trip LED Indication
- Fault Start Event Recording & LED Indication + Output[4]
- Pre-Alarm LED Indication + Output[4]
- Trip Event Memory (non-volatile 7 previous records)
- Fault Start Event Memory (non-volatile 4 previous records)
- Programmable Relay Output contact for K2
- Last Trip Elapsed Time (up to 99days)
- Software Lock to Prevent Unauthorized Setting
- Complies with IEC-60255-26 Standards
- External Plug-in Module for :- A-01s (RS-485 MODBUS RTU) isolated type

technical data

Current Input (IΔn)	: ZCT (multiple sizes from ID of 25~200mm)
Measurement Range	: 0.005 ~ 30.0 A
Output Relay Rating	: SPDT 5A, 250V AC/DC
Display	: 7-Segment LED (3 + 1digit)
Indication (LEDs)	: mA, pre-alarm, fault, fault start event, lo / hi trip
Operating Temp.	: 0°C ~ +55°C
Humidity	: 56 days at 93%RH, 40°C non-condensing
IP Rating	: IP54 (front panel)
Weight	: 230 g

parameter setting

IΔn >: lo-set	30mA~5.00A 0.03~1.00A (step of 0.01A) 1.00~5.00A (step of 0.05A)
t>: lo-set tri p delay time	0.03s~20.0s 0.03s~0.10s (step of 0.01s) 0.10s~1.00s (step of 0.02s) 1.0s~20.0s (step of 0.1s)
IΔn >>: hi-set	OFF or 0.1A~20.0A (step of 0.1A)
t>>: hi-set trip delay time	fixed @ 30ms

aux power

DP-10-220a	: 65 ~ 275 Vac (45~65Hz), 90 ~ 300 Vdc
DP-10-024d	: 16 ~ 36 Vdc
Consumption	: < 3VA

fundamental frequency

50 or 60Hz Selectable

K1 output contact options

Latching (Lc) or non-latching (nLc) trip

K2 output contact options

CbF (circuit breaker Failure - nLc only)
A50 (pre-fault 50% of IΔn> - Lc or nLc)
A90 (pre-fault 90% of IΔn> - Lc or nLc)
trP (tripping output - Lc or nLc)
LFS (lo fault start signal - Lc or nLc)
HFS (hi fault start signal - Lc or nLc)
AFS (all fault start signal - Lc or nLc)
dUF (device failure - Lc only)

[1]SPARC - sampling progressive algorithm for RMS Computation:
Computation of multiple rms values/cycle (Superior response in short circuit situation)

[2]DCOI - dc offset independent algorithm:
Cancels out dc signal caused by EMI and aging circuitry (Better Immunity against EMI)

[3]Fundamental Signal Detection:
To discriminate between signal and noise and eliminate nuisance tripping

[4]Output on k2 dependent on the programmed options

Note: Specification subject to change without prior notification (please visit www.delab.com.my for latest specification)

casing dimension

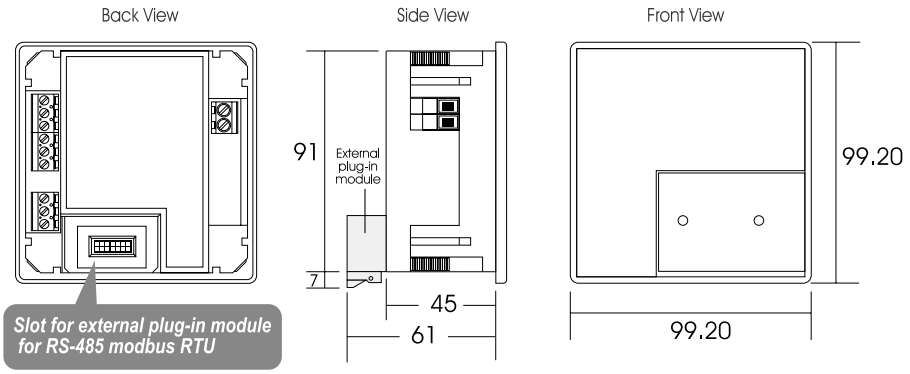

wiring diagram

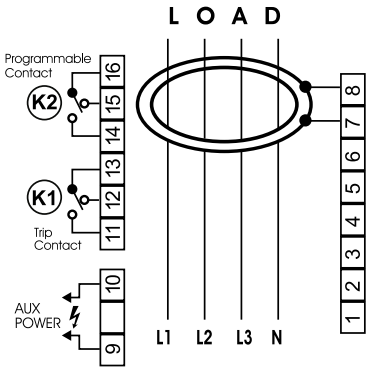

panel cut-out

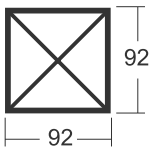

Panel Cut-out : 92 x 92

ordering information

Model	Description
DP-10-220a	65 ~ 275 Vac (45~65Hz), 90 ~ 300 Vdc
DP-10-024d	16 ~ 36 Vdc

Note: All measurement in mm.

DIN-rail mount type

Earth Leakage Relay

TM-18c

*18r *Auto-reset*

DELAB

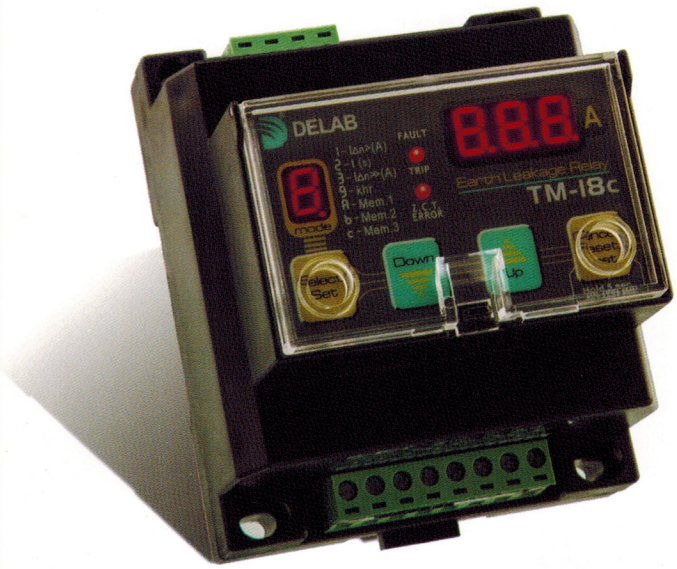

features

- True RMS Measurement
- Lo-set
- Hi-set
- Operation Hour Recording
- Fault & Trip LED Indication
- Trip Value Recording (3 memory)
- Auto Z.C.T. Connection Check (open/short)
- Total Trip Count Information
- *Self-reclosing / Auto-reset
- *Remote External Reset Output
- *Trip Lock-out Setting
- Programmable Relay Output
- Software Lock to Prevent Unauthorized Setting
- Complies with :
  IEC-61000-4-2/4-4/4-5/255-5:1 Standards

technical data

Current Input (IΔn)	: ZCT (multiple sizes from ID of 25~200mm)
Output Relay Rating	: SPDT 5A, 250V AC/DC
Display	: 7-Segment LED (3 + 1digit)
Indication (LEDs)	: mA / trip / Z.C.T. error
Operating Temp.	: 0°C ~ +55°C
Humidity	: 56 days at 93%RH, 40°C non-condensing
IP Rating	: IP52 (front panel)
Weight	: 320 g

parameter setting

IΔn >: lo-set	30 mA ~ 30 A 0.03, 0.05, 0.1, 0.3, 0.5, 0.8, 1.0, 1.5, 2.0, 3.0, 5.0, 10, 15 ,20, 30
t>: lo-set trip delay time	0.05s ~ 20.0s 0.05, 0.10 ~ 20.0 (step of 0.1s)
IΔn >>: hi-set	OFF or 5~50 Amp (5 Amp step)
t>>: hi-set trip delay time	fixed @ 30ms

*auto-reset setting

Trip lock-out setting	:	1 ~ 10
Auto reset timer	:	3.0 ~ 200 sec.

fundamental frequency

50 or 60Hz Selectable

K1 output contact

Latching (Lc) trip

programmable K2 output contact

Latching or non-latching (nLc)

(*) Available for models TM-18r (Auto-reset) only

casing dimension

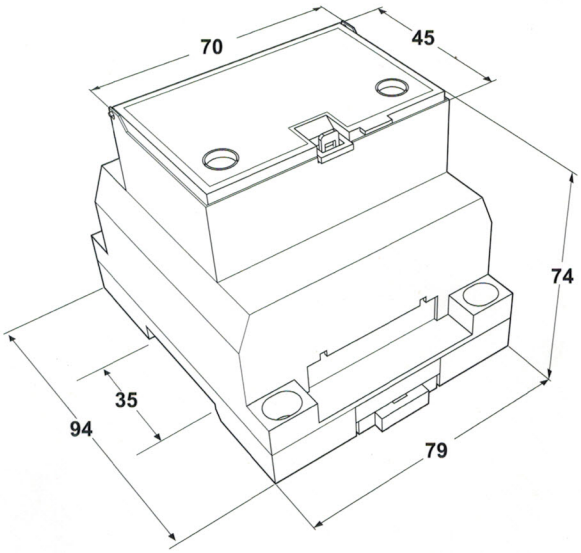

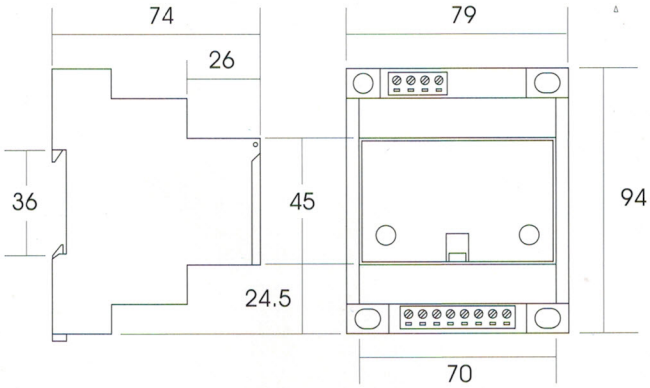

wiring diagram

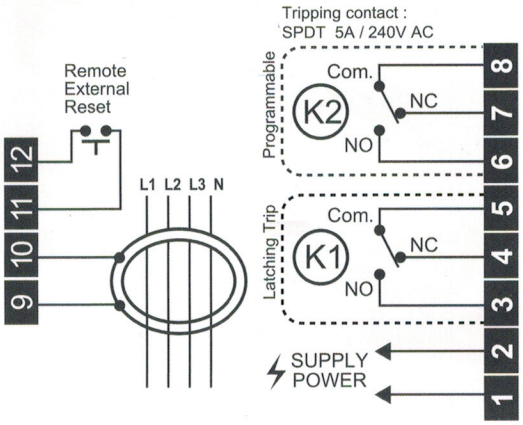

auto-reset wiring diagram

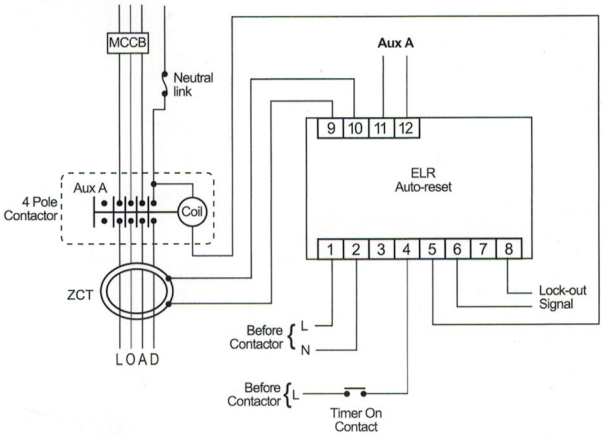

ordering information

Model	Description
TM-18c	220 ~ 240 Vac (50~60Hz)
TM-18r	Auto-reset type : 220 ~ 240 Vac (50~60Hz)

DELAB

Zero Phase Current Transformer

ZPC-25

45
65
80
100
150
200

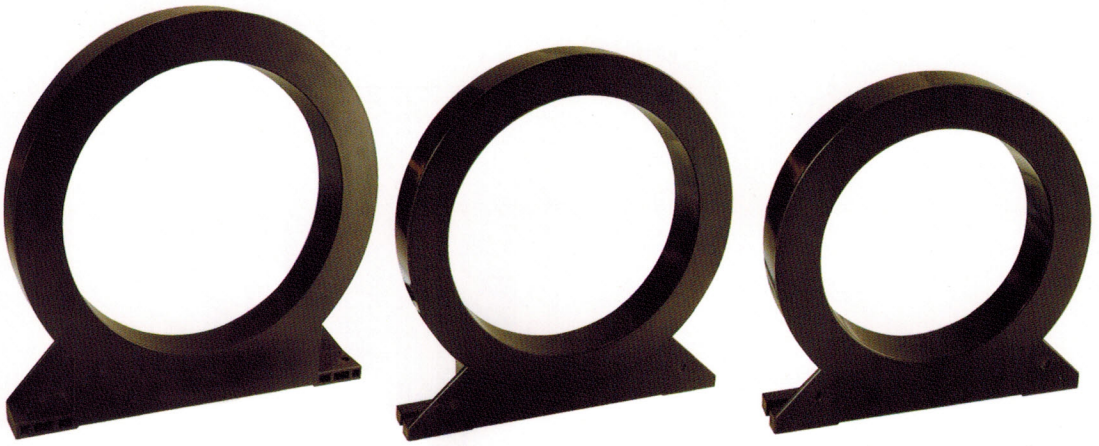

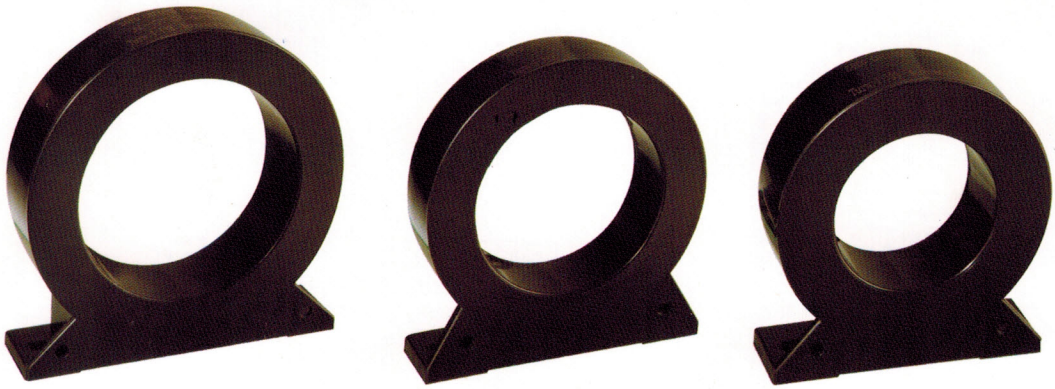

technical data

Frequency	: 50 / 60 Hz
Current Ratio	: 200 / 1.5
Insulation	: 600V / 50 Hz 1 min.
Sec. Burden	: 10 VA
Cable	: 1.5 meters

For optimum performance and accuracy, we recommend that you use only the original Z.C.T. intended for use with the device. Using others Z.C.T. could compromise on the performance or accuracy. The warranty does not cover product failures which have been caused by use of other Z.C.T.

casing dimension

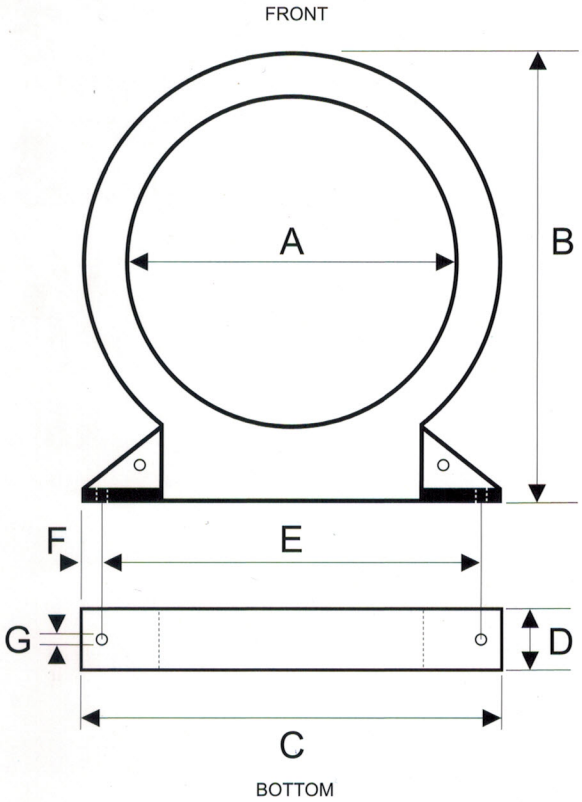

ZPC model	25	45	65	80	100	150	200
Applicable Current (Single PVC)	• 60 A	• 200 A	• 300 A	• 400 A	• 500 A	• 800 A	•800 A
A (mm)	25	45	65	80	100	150	200
B (mm)	55	85	105	120	150	209	274
C (mm)	50	77	98	115	145	194	265
D (mm)	23	25	25	28	25	28	30
E (mm)	4	6	7.8	9.8	12.8	17.8	24.7
F (mm)	0.5	1	1	1	1	1	1
G (mm)	5	5	5	5	5	5	5
Weight (kg)	~0.13	~0.19	~0.27	~0.37	~0.56	~0.96	~1.62

calculation to determine inner diameter of ZCT required

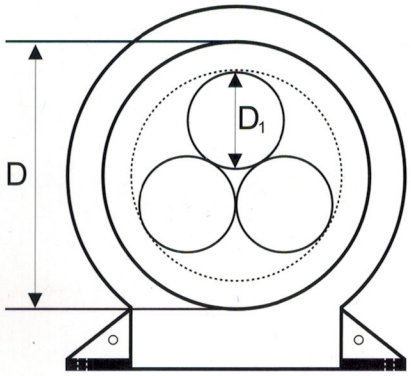

3 wire

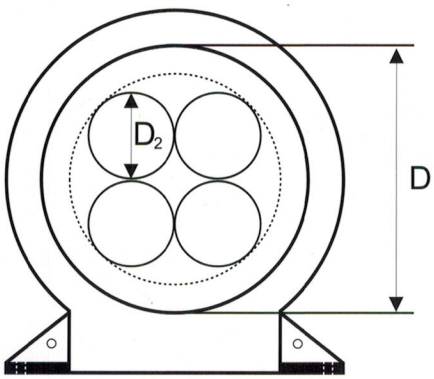

4 wire

model ZPC	25	45	65	80	100	150	200
D (ZCT inner diameter mm)	25	45	65	80	100	150	200
D_1 (3 wire max cable diameter mm)	9	16	24	32	40	60	82
D_2 (4 wire max cable diameter mm)	8	14	22	29	36	54	75

ordering information

Model	Description	Model	Description
ZPC-25	Hole diameter 25mm	ZPC-100	Hole diameter 100mm
ZPC-45	Hole diameter 45mm	ZPC-150	Hole diameter 150mm
ZPC-65	Hole diameter 65mm	ZPC-200	Hole diameter 200mm
ZPC-80	Hole diameter 80mm		

DELAB

external plug-in module

isolated type RS-485 Modbus RTU

A-01s

*02s

PQM-1000s register map (ver 1.0.04)

1reg	=	2bytes (16bit)
short int	=	16 bit
integer	=	32 bit
long int	=	64 bit

(isolated type) Models

A-01s : RS485 Modbus RTU

A-02s : RS485 Modbus RTU + 1 output contact

casing dimension

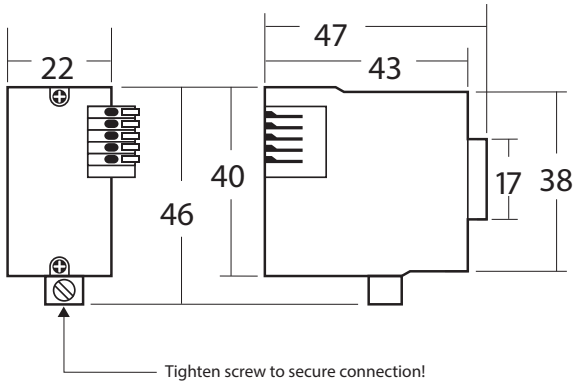

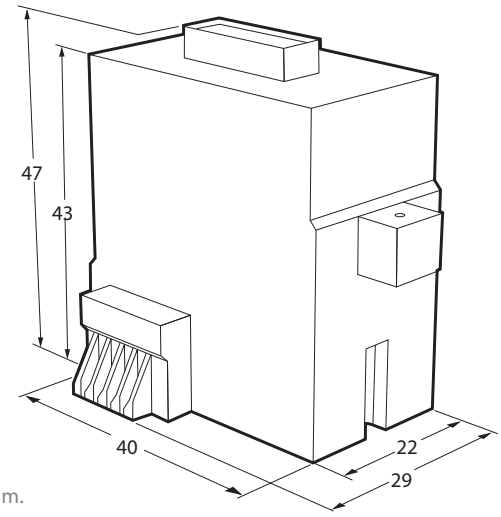

All measurement in mm.

Note: Specification subject to change without prior notification (please visit www.delab.com.my for latest specification)

register map (version 1.0.04)

Instantaneous Parameter

Reg Addr (Hex)	Register	(R/W)	Unit	Multiplier	Format	Comment	Reg Byte Count	Reg Addr (Dec)
0000	Ampere L1	R	A	0.001	unsigned int		4	0
0002	Ampere L2	R	A	0.001	unsigned int		4	2
0004	Ampere L3	R	A	0.001	unsigned int		4	4
0006	Ampere (Neutral current)	R	A	0.001	unsigned int		4	6
0008	Voltage L1	R	V	0.1	unsigned int		4	8
000A	Voltage L2	R	V	0.1	unsigned int		4	10
000C	Voltage L3	R	V	0.1	unsigned int		4	12
000E	Voltage L12	R	V	0.1	unsigned int		4	14
0010	Voltage L23	R	V	0.1	unsigned int		4	16
0012	Voltage L31	R	V	0.1	unsigned int		4	18
0014	Voltage Asym	R	%	0.1	unsigned short int		2	20
0015	Frequency	R	Hz	0.01	unsigned short int		2	21
0016	kW L1	R	W	0.1	int	neg => export	4	22
0018	kW L2	R	W	0.1	int		4	24
001A	kW L3	R	W	0.1	int		4	26
001C	kVar L1	R	Var	0.1	int	neg => inductive	4	28
001E	kVar L2	R	Var	0.1	int		4	30
0020	kVar L3	R	Var	0.1	int		4	32
0022	kVA L1	R	VA	0.1	unsigned int		4	34
0024	kVA L2	R	VA	0.1	unsigned int		4	36
0026	kVA L3	R	VA	0.1	unsigned int		4	38
0028	PF L1	R	-	0.001	short int	neg => inductive	2	40
0029	PF L2	R	-	0.001	short int		2	41
002A	PF L3	R	-	0.001	short int		2	42
002B	PF avg	R	-	0.001	short int		2	43
002C	Cos L1	R	-	0.001	short int		2	44
002D	Cos L2	R	-	0.001	short int		2	45
002E	Cos L3	R	-	0.001	short int		2	46
002F	Cos avg	R	-	0.001	short int		2	47
0030	Energy Import (kWh)	R/W	kWh	0.1	unsigned int		8	48
0034	Energy Export (kWh)	R/W	kWh	0.1	unsigned int		8	52
0038	Energy Inductive (kVarh)	R/W	kVarh	0.1	unsigned int		8	56
003C	Energy Capacitive (kVarh)	R/W	kVarh	0.1	unsigned int		8	60
0040	Energy Apparent (kVAh)	R/W	kVAh	0.1	unsigned int		8	64
0044	Max Dmd kW L1 (import)	R/W	W	0.1	unsigned int		4	68
0046	Max Dmd kW L2 (import)	R/W	W	0.1	unsigned int		4	70
0048	Max Dmd kW L3 (import)	R/W	W	0.1	unsigned int		4	72
004A	Max Dmd kW Total (import)	R/W	W	0.1	unsigned int		4	74
004C	Max Dmd kVA L1	R/W	VA	0.1	unsigned int		4	76
004E	Max Dmd kVA L2	R/W	VA	0.1	unsigned int		4	78
0050	Max Dmd kVA L3	R/W	VA	0.1	unsigned int		4	80
0052	Max Dmd kVA Total	R/W	VA	0.1	unsigned int		4	82
0054	Max Dmd I L1	R/W	A	0.001	unsigned int		4	84
0056	Max Dmd I L2	R/W	A	0.001	unsigned int		4	86
0058	Max Dmd I L3	R/W	A	0.001	unsigned int		4	88
005A	Max Dmd Iavg (3phase)	R/W	A	0.001	unsigned int		4	90
005C	Prev Dmd kW L1 (import)	R/W	W	0.1	unsigned int		4	92
005E	Prev Dmd kW L2 (import)	R/W	W	0.1	unsigned int		4	94
0060	Prev Dmd kW L3 (import)	R/W	W	0.1	unsigned int		4	96
0062	Prev Dmd kW Total (import)	R/W	W	0.1	unsigned int		4	98
0064	Prev Dmd kVA L1	R/W	VA	0.1	unsigned int		4	100
0066	Prev Dmd kVA L2	R/W	VA	0.1	unsigned int		4	102
0068	Prev Dmd kVA L3	R/W	VA	0.1	unsigned int		4	104
006A	Prev Dmd kVA Total	R/W	VA	0.1	unsigned int		4	106
006C	Prev Dmd I L1	R/W	A	0.001	unsigned int		4	108
006E	Prev Dmd I L2	R/W	A	0.001	unsigned int		4	110
0070	Prev Dmd I L3	R/W	A	0.001	unsigned int		4	112
0072	Prev Dmd Iavg (3phase)	R/W	A	0.001	unsigned int		4	114
0074	Demand Elapsed Time	R/W	sec	1	unsigned short int		2	116
0075	THD V1	R	%	0.1	unsigned short int		2	117
0076	THD V2	R	%	0.1	unsigned short int		2	118
0077	THD V3	R	%	0.1	unsigned short int		2	119
0078	THD I1	R	%	0.1	unsigned short int		2	120
0079	THD I2	R	%	0.1	unsigned short int		2	121
007A	THD I3	R	%	0.1	unsigned short int		2	122
007B	kf I1	R	-	0.01	unsigned short int		2	123
007C	kf I2	R	-	0.01	unsigned short int		2	124
007D	kf I2	R	-	0.01	unsigned short int		2	125

Voltage Harmonic Spectrum Parameter (Secondary Value)

Reg Addr (Hex)	Register	(R/W)	Unit	Multiplier	Format	Comment	Reg Byte Count	Reg Addr (Dec)
0300	V L1-Spectrum H-order 1	R	V	0.1 * vtr	unsigned int	Actual value =	2	768
0301	V L1-Spectrum H-order 3	R	V	0.1 * vtr	unsigned int	Reg Val * vtr * 0.1	2	769
0302	V L1-Spectrum H-order 5	R	V	0.1 * vtr	unsigned int		2	770
0303	V L1-Spectrum H-order 7	R	V	0.1 * vtr	unsigned int		2	771
0304	V L1-Spectrum H-order 9	R	V	0.1 * vtr	unsigned int		2	772
0305	V L1-Spectrum H-order 11	R	V	0.1 * vtr	unsigned int		2	773
0306	V L1-Spectrum H-order 13	R	V	0.1 * vtr	unsigned int		2	774
0307	V L1-Spectrum H-order 15	R	V	0.1 * vtr	unsigned int		2	775
0308	V L1-Spectrum H-order 17	R	V	0.1 * vtr	unsigned int		2	776
0309	V L1-Spectrum H-order 19	R	V	0.1 * vtr	unsigned int		2	777
030A	V L1-Spectrum H-order 21	R	V	0.1 * vtr	unsigned int		2	778
030B	V L1-Spectrum H-order 23	R	V	0.1 * vtr	unsigned int		2	779
030C	V L1-Spectrum H-order 25	R	V	0.1 * vtr	unsigned int		2	780
030D	V L1-Spectrum H-order 27	R	V	0.1 * vtr	unsigned int		2	781
030E	V L1-Spectrum H-order 29	R	V	0.1 * vtr	unsigned int		2	782
030F	V L1-Spectrum H-order 31	R	V	0.1 * vtr	unsigned int		2	783
0310	V L2-Spectrum H-order 1	R	V	0.1 * vtr	unsigned int		2	784
0311	V L2-Spectrum H-order 3	R	V	0.1 * vtr	unsigned int		2	785
0312	V L2-Spectrum H-order 5	R	V	0.1 * vtr	unsigned int		2	786
0313	V L2-Spectrum H-order 7	R	V	0.1 * vtr	unsigned int		2	787
0314	V L2-Spectrum H-order 9	R	V	0.1 * vtr	unsigned int		2	788
0315	V L2-Spectrum H-order 11	R	V	0.1 * vtr	unsigned int		2	789
0316	V L2-Spectrum H-order 13	R	V	0.1 * vtr	unsigned int		2	790
0317	V L2-Spectrum H-order 15	R	V	0.1 * vtr	unsigned int		2	791
0318	V L2-Spectrum H-order 17	R	V	0.1 * vtr	unsigned int		2	792
0319	V L2-Spectrum H-order 19	R	V	0.1 * vtr	unsigned int		2	793
031A	V L2-Spectrum H-order 21	R	V	0.1 * vtr	unsigned int		2	794
031B	V L2-Spectrum H-order 23	R	V	0.1 * vtr	unsigned int		2	795
031C	V L2-Spectrum H-order 25	R	V	0.1 * vtr	unsigned int		2	796
031D	V L2-Spectrum H-order 27	R	V	0.1 * vtr	unsigned int		2	797
031E	V L2-Spectrum H-order 29	R	V	0.1 * vtr	unsigned int		2	798
031F	V L2-Spectrum H-order 31	R	V	0.1 * vtr	unsigned int		2	799
0320	V L3-Spectrum H-order 1	R	V	0.1 * vtr	unsigned int		2	800
0321	V L3-Spectrum H-order 3	R	V	0.1 * vtr	unsigned int		2	801
0322	V L3-Spectrum H-order 5	R	V	0.1 * vtr	unsigned int		2	802
0323	V L3-Spectrum H-order 7	R	V	0.1 * vtr	unsigned int		2	803
0324	V L3-Spectrum H-order 9	R	V	0.1 * vtr	unsigned int		2	804
0325	V L3-Spectrum H-order 11	R	V	0.1 * vtr	unsigned int		2	805
0326	V L3-Spectrum H-order 13	R	V	0.1 * vtr	unsigned int		2	806
0327	V L3-Spectrum H-order 15	R	V	0.1 * vtr	unsigned int		2	807
0328	V L3-Spectrum H-order 17	R	V	0.1 * vtr	unsigned int		2	808
0329	V L3-Spectrum H-order 19	R	V	0.1 * vtr	unsigned int		2	809
032A	V L3-Spectrum H-order 21	R	V	0.1 * vtr	unsigned int		2	810
032B	V L3-Spectrum H-order 23	R	V	0.1 * vtr	unsigned int		2	811
032C	V L3-Spectrum H-order 25	R	V	0.1 * vtr	unsigned int		2	812
032D	V L3-Spectrum H-order 27	R	V	0.1 * vtr	unsigned int		2	813
032E	V L3-Spectrum H-order 29	R	V	0.1 * vtr	unsigned int		2	814
032F	V L3-Spectrum H-order 31	R	V	0.1 * vtr	unsigned int		2	815
0330	THD V1	R	%	0.1	unsigned short int		2	816
0331	THD V2	R	%	0.1	unsigned short int		2	817

Ampere Harmonic Spectrum Parameter (Secondary Value)

Reg Addr (Hex)	Register	(R/W)	Unit	Multiplier	Format	Comment	Reg Byte Count	Reg Addr (Dec)
0400	I L1-Spectrum H-order 1	R	A	0.001 * ctr	unsigned int	Actual value =	2	1024
0401	I L1-Spectrum H-order 3	R	A	0.001 * ctr	unsigned int	Reg Val * ctr * 0.001	2	1025
0402	I L1-Spectrum H-order 5	R	A	0.001 * ctr	unsigned int		2	1026
0403	I L1-Spectrum H-order 7	R	A	0.001 * ctr	unsigned int		2	1027
0404	I L1-Spectrum H-order 9	R	A	0.001 * ctr	unsigned int		2	1028
0405	I L1-Spectrum H-order 11	R	A	0.001 * ctr	unsigned int		2	1029
0406	I L1-Spectrum H-order 13	R	A	0.001 * ctr	unsigned int		2	1030
0407	I L1-Spectrum H-order 15	R	A	0.001 * ctr	unsigned int		2	1031
0408	I L1-Spectrum H-order 17	R	A	0.001 * ctr	unsigned int		2	1032
0409	I L1-Spectrum H-order 19	R	A	0.001 * ctr	unsigned int		2	1033
040A	I L1-Spectrum H-order 21	R	A	0.001 * ctr	unsigned int		2	1034
040B	I L1-Spectrum H-order 23	R	V	0.001 * ctr	unsigned int		2	1035
040C	I L1-Spectrum H-order 25	R	V	0.001 * ctr	unsigned int		2	1036
040D	I L1-Spectrum H-order 27	R	V	0.001 * ctr	unsigned int		2	1037
040E	I L1-Spectrum H-order 29	R	V	0.001 * ctr	unsigned int		2	1038
040F	I L1-Spectrum H-order 31	R	V	0.001 * ctr	unsigned int		2	1039
0410	I L2-Spectrum H-order 1	R	A	0.001 * ctr	unsigned int		2	1040
0411	I L2-Spectrum H-order 3	R	A	0.001 * ctr	unsigned int		2	1041
0412	I L2-Spectrum H-order 5	R	A	0.001 * ctr	unsigned int		2	1042
0413	I L2-Spectrum H-order 7	R	A	0.001 * ctr	unsigned int		2	1043
0414	I L2-Spectrum H-order 9	R	A	0.001 * ctr	unsigned int		2	1044
0415	I L2-Spectrum H-order 11	R	A	0.001 * ctr	unsigned int		2	1045
0416	I L2-Spectrum H-order 13	R	A	0.001 * ctr	unsigned int		2	1046
0417	I L2-Spectrum H-order 15	R	A	0.001 * ctr	unsigned int		2	1047
0418	I L2-Spectrum H-order 17	R	A	0.001 * ctr	unsigned int		2	1048
0419	I L2-Spectrum H-order 19	R	A	0.001 * ctr	unsigned int		2	1049
041A	I L2-Spectrum H-order 21	R	A	0.001 * ctr	unsigned int		2	1050
041B	I L2-Spectrum H-order 23	R	V	0.001 * ctr	unsigned int		2	1051
041C	I L2-Spectrum H-order 25	R	V	0.001 * ctr	unsigned int		2	1052
041D	I L2-Spectrum H-order 27	R	V	0.001 * ctr	unsigned int		2	1053
041E	I L2-Spectrum H-order 29	R	V	0.001 * ctr	unsigned int		2	1054
041F	I L2-Spectrum H-order 31	R	V	0.001 * ctr	unsigned int		2	1055
0420	I L3-Spectrum H-order 1	R	A	0.001 * ctr	unsigned int		2	1056
0421	I L3-Spectrum H-order 3	R	A	0.001 * ctr	unsigned int		2	1057
0422	I L3-Spectrum H-order 5	R	A	0.001 * ctr	unsigned int		2	1058
0423	I L3-Spectrum H-order 7	R	A	0.001 * ctr	unsigned int		2	1059
0424	I L3-Spectrum H-order 9	R	A	0.001 * ctr	unsigned int		2	1060
0425	I L3-Spectrum H-order 11	R	A	0.001 * ctr	unsigned int		2	1061
0426	I L3-Spectrum H-order 13	R	A	0.001 * ctr	unsigned int		2	1062
0427	I L3-Spectrum H-order 15	R	A	0.001 * ctr	unsigned int		2	1063
0428	I L3-Spectrum H-order 17	R	A	0.001 * ctr	unsigned int		2	1064
0429	I L3-Spectrum H-order 19	R	V	0.001 * ctr	unsigned int		2	1065
042A	I L3-Spectrum H-order 21	R	V	0.001 * ctr	unsigned int		2	1066
042B	I L3-Spectrum H-order 23	R	V	0.001 * ctr	unsigned int		2	1067
042C	I L3-Spectrum H-order 25	R	V	0.001 * ctr	unsigned int		2	1068
042D	I L3-Spectrum H-order 27	R	V	0.001 * ctr	unsigned int		2	1069
042E	I L3-Spectrum H-order 29	R	A	0.001 * ctr	unsigned int		2	1070
042F	I L3-Spectrum H-order 31	R	A	0.001 * ctr	unsigned int		2	1071
0430	THD I1	R	%	0.1	unsigned short int		2	1072
0431	THD I2	R	%	0.1	unsigned short int		2	1073
0432	THD I3	R	%	0.1	unsigned short int		2	1074
0433	kf I1	R	-	0.01	unsigned short int		2	1075
0434	kf I2	R	-	0.01	unsigned short int		2	1076

Min / Max Parameter

Reg Addr (Hex)	Register	(R/W)	Unit	Multiplier	Format	Comment	Reg Byte Count	Reg Addr (Dec)
0200	V L1 min	R/W	V	0.1	unsigned int		4	512
0202	V L2 min	R/W	V	0.1	unsigned int		4	514
0204	V L3 min	R/W	V	0.1	unsigned int		4	516
0206	V L1 max	R/W	V	0.1	unsigned int		4	518
0208	V L2 max	R/W	V	0.1	unsigned int		4	520
020A	V L3 max	R/W	V	0.1	unsigned int		4	522
020C	V assym min	R/W	%	0.1	unsigned short int		2	524
020D	V assym max	R/W	%	0.1	unsigned short int		2	525
020E	I L1 min	R/W	A	0.001	unsigned int		4	526
0210	I L2 min	R/W	A	0.001	unsigned int		4	528
0212	I L3 min	R/W	A	0.001	unsigned int		4	530
0214	I n min	R/W	A	0.001	unsigned int		4	532
0216	I L1 max	R/W	A	0.001	unsigned int		4	534
0218	I L2 max	R/W	A	0.001	unsigned int		4	536
021A	I L3 max	R/W	A	0.001	unsigned int		4	538
021C	I n max	R/W	A	0.001	unsigned int		4	540
021E	kW L1 min (import)	R/W	W	0.1	unsigned int		4	542
0220	kW L2 min (import)	R/W	W	0.1	unsigned int		4	544
0222	kW L3 min (import)	R/W	W	0.1	unsigned int		4	546
0224	kW total min (import)	R/W	W	0.1	unsigned int		4	548
0226	kW L1 max (import)	R/W	W	0.1	unsigned int		4	550
0228	kW L2 max (import)	R/W	W	0.1	unsigned int		4	552
022A	kW L3 max (import)	R/W	W	0.1	unsigned int		4	554
022C	kW total max (import)	R/W	W	0.1	unsigned int		4	556
022E	THD V L1 min	R/W	%	0.1	unsigned int		2	558
022F	THD V L2 min	R/W	%	0.1	unsigned int		2	559
0230	THD V L3 min	R/W	%	0.1	unsigned int		2	560
0231	THD V L1 max	R/W	%	0.1	unsigned int		2	561
0232	THD V L2 max	R/W	%	0.1	unsigned int		2	562
0233	THD V L3 max	R/W	%	0.1	unsigned int		2	563
0234	THD I L1 min	R/W	%	0.1	unsigned int		2	564
0235	THD I L2 min	R/W	%	0.1	unsigned int		2	565
0236	THD I L3 min	R/W	%	0.1	unsigned int		2	566
0237	THD I L1 max	R/W	%	0.1	unsigned int		2	567
0238	THD I L2 max	R/W	%	0.1	unsigned int		2	568
0239	THD I L3 max	R/W	%	0.1	unsigned int		2	569
023A	Vmax Elapsed	R	s	1	unsigned int		4	570
023C	Imax Elapsed	R	s	1	unsigned int		4	572
023E	THD Vmax Elapsed	R	s	1	unsigned int		4	574

Instantaneous Parameter

Reg Addr (Hex)	Register	(R/W)	Unit	Multiplier	Format	Comment	Reg Byte Count	Reg Addr (Dec)
0080	V L1 angle	R	deg	0.1	short int	0 = -359.9	2	128
0081	V L2 angle	R	deg	0.1	short int		2	129
0082	V L3 angle	R	deg	0.1	short int		2	130
0083	I L1 angle	R	deg	0.1	short int		2	131
0084	I L2 angle	R	deg	0.1	short int		2	132
0085	I L3 angle	R	deg	0.1	short int		2	133
0086	In angle (neutral)	R	deg	0.1	short int		2	134
0087	Phase Rotation	R	-	-	short int	bit<1,0> = bit.valid	2	135

L1 Voltage Waveform (2 cycle waveform - scaled down 8bits / data point: Total 128pts)

Reg Addr (Hex)	Register	(R/W)	Unit	Multiplier	Format	Comment	Reg Byte Count	Reg Addr (Dec)
0500	Waveform Definition<2:0>	R	-	-	unsigned short int	00=L1,01=L2,10=L3 bit<2>=0 => V, bit<2>=1 => I	2	1280
0501	V L1 phasor angle	R	deg	0.1	short int	0 ~ -359.9	2	1281
0502	THD-V1	R	%	0.1	unsigned short int		2	1282
0503	Voltage L1	R	V	0.1	unsigned int		4	1283
0505	V data pt<1:0>	R	-	1	signed bytes * 2		2	1285
. . .	. . . (up to)		-				124	1286
0544	V data pt<127:126>	R/W	-	1	signed bytes * 2		2	1348
						Total bytes	138	

L1 Ampere Waveform (2 cycle waveform - scaled down 8bits / data point: Total 128pts)

Reg Addr (Hex)	Register	(R/W)	Unit	Multiplier	Format	Comment	Reg Byte Count	Reg Addr (Dec)
0580	Waveform Definition<2:0>	R	-	-	unsigned short int		2	1408
0581	I L1 phasor angle	R	deg	0.1	short int	0 = -359.9	2	1409
0582	THD-I1	R	%	0.1	unsigned short int		2	1410
0583	Ampere L1	R	A	0.001	unsigned int		4	1411
0585	I data pt<1:0>	R	-	1	signed bytes * 2		2	1413
. . .	. . . (up to)		-				124	1414
05C4	I data pt<127:126>	R/W	-	1	signed bytes * 2		2	1476
						Total bytes	138	

L2 Voltage Waveform (2 cycle waveform - scaled down 8bits / data point: Total 128pts)

Reg Addr (Hex)	Register	(R/W)	Unit	Multiplier	Format	Comment	Reg Byte Count	Reg Addr (Dec)
0600	Waveform Definition<2:0>	R	-	-	unsigned short int		2	1536
0601	V L2 phasor angle	R	deg	0.1	short int	0 = -359.9	2	1537
0602	THD-V2	R	%	0.1	unsigned short int		2	1538
0603	Voltage L2	R	V	0.1	unsigned int		4	1539
0605	V data pt<1:0>	R	-	1	signed bytes * 2		2	1541
. . .	. . . (up to)		-				124	1542

L2 Ampere Waveform (2 cycle waveform - scaled down 8bits / data point: Total 128pts)

Reg Addr (Hex)	Register	(R/W)	Unit	Multiplier	Format	Comment	Reg Byte Count	Reg Addr (Dec)
0680	Waveform Definition<2:0>	R	-	-	unsigned short int		2	1664
0681	I L2 phasor angle	R	deg	0.1	short int	0 = -359.9	2	1665
0682	THD-I2	R	%	0.1	unsigned short int		2	1666
0683	Ampere L2	R	A	0.001	unsigned int		4	1667
0685	I data pt<1:0>	R	-	1	signed bytes * 2		2	1669
. . .	. . . (up to)		-				124	1670

L3 Voltage Waveform (2 cycle waveform - scaled down 8bits / data point: Total 128pts)

Reg Addr (Hex)	Register	(R/W)	Unit	Multiplier	Format	Comment	Reg Byte Count	Reg Addr (Dec)
0700	Waveform Definition<2:0>	R	-	-	unsigned short int		2	1792
0701	V L3 phasor angle	R	deg	0.1	short int	0 = -359.9	2	1793
0702	THD-V3	R	%	0.1	unsigned short int		2	1794
0703	Voltage L3	R	V	0.1	unsigned int		4	1795
0705	V data pt<1:0>	R	-	1	signed bytes * 2		2	1797
. . .	. . . (up to)		-				124	1798

L3 Ampere Waveform (2 cycle waveform - scaled down 8bits / data point: Total 128pts)

Reg Addr (Hex)	Register	(R/W)	Unit	Multiplier	Format	Comment	Reg Byte Count	Reg Addr (Dec)
0780	Waveform Definition<2:0>	R	-	-	unsigned short int		2	1920
0781	I L3 phasor angle	R	deg	0.1	short int	0 = -359.9	2	1921
0782	THD-I3	R	%	0.1	unsigned short int		2	1922
0783	Ampere L3	R	A	0.001	unsigned int		4	1923
0785	I data pt<1:0>	R	-	1	signed bytes * 2		2	1925
. . .	. . . (up to)		-				124	1926

Alternative Addr Setting Parameter

Reg Addr (Hex)	Register	(R/W)	Unit	Multiplier	Format	Comment	Reg Byte Count	Reg Addr (Dec)
0F00	Device Code	R	-	-	unsigned short int	fixed 0x0001	2	3840
0F01	Version	R	-	-	unsigned short int	1002	2	3841
0F02	CT Ratio (ctr)	R/W	-	1	unsigned short int	0 ~ 2000	2	3842
0F03	VT Ratio (vtr)	R/W	-	0.1	unsigned short int	10 ~ 25000	2	3843

Setting Parameter

Reg Addr (Hex)	Register	(R/W)	Unit	Multiplier	Format	Comment	Reg Byte Count	Reg Addr (Dec)
FF00	Device Code	R	-	-	unsigned short int	fixed 0x0001	2	65280
FF01	Version	R	-	-	unsigned short int	1002	2	65281
FF02	CT Ratio (ctr)	R/W	-	1	unsigned short int	0 ~ 2000	2	65282
FF03	VT Ratio (vtr)	R/W	-	0.1	unsigned short int	10 ~ 25000	2	65283
FF04	Demand Interval	R/W	min	1	unsigned short int	10 ~ 60	2	65284
						Total bytes	10	

ordering information

Model	Description
A-01s	RS485 Modbus RTU
A-02s	RS485 Modbus RTU + 1 output

Power Factor Controller

NV-5/7

DELAB

features

- Micro Processor Based
- Cosφ and Power Factor Info
- LED Indication for Individual Step
- Auto C/K Detection
- Auto or Manual Operation
- Auto Detection of C.T. Polarity
- Secondary Current Info
- Voltage & Frequency Info
- THD-I and THD-V Info
- Minimum Operation @ < 1% Load
- Programmable Over Voltage Alarm
- Alarm or Fan Output
- Automatic Alternate Switching to Utilize Capacitors Evenly
- Preset / Auto / Customized Switching Program
- Programmable Software Lock
- Flush Mount

technical data

Power supply	: 240 VAC (± 10%)
Rated current	: ../5A
Rated frequency	: 47 ~ 63 Hz
Operating current	: < 0.05 A
Output relay / Alarm	: 5A / 250 VAC
No voltage release	: < 40 ms
Tripping contact	: SPDT 5A / 240 VAC
Weight	: ~460 g
Operating temp.	: 0° C ~ +55° C
Standard	: IEC : 61000-4-2/4-4/4-5/255-5:1

aux power

NV-5-220a	: 220 ~ 240 Vac (47~63Hz)
NV-7-220a	: 220 ~ 240 Vac (47~63Hz)
Consumption	: < 3VA

fundamental frequency

Automatic (47~63 Hz) or selectable 50 or 60 Hz

parameter setting

C / K value	: Auto or 0.02~1.00
Cos φ	: 0.85 (Ind.) ~ 0.95 (Cap.)
Switching program	: Auto or P-0 ~ P-6 or custom
Switching interval	: 2.0 ~ 60.0 sec.
(V) > over voltage	: OFF or 240 ~ 270 V

programmable switching sequence

Selection of preset, automatic or customize program sequence.

program sequence

P - 0	Linear
P - 1	1 : 1 : 1 : 1 : 1
P - 2	1 : 2 : 2 : 2 : 2
P - 3	1 : 1 : 2 : 2 : 2
P - 4	1 : 1 : 1 : 2 : 2
P - 5	1 : 2 : 4 : 4 : 4
P - 6	1 : 1 : 2 : 2 : 4

casing dimension

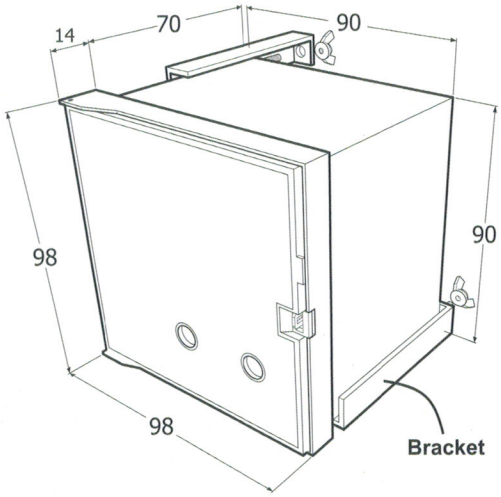

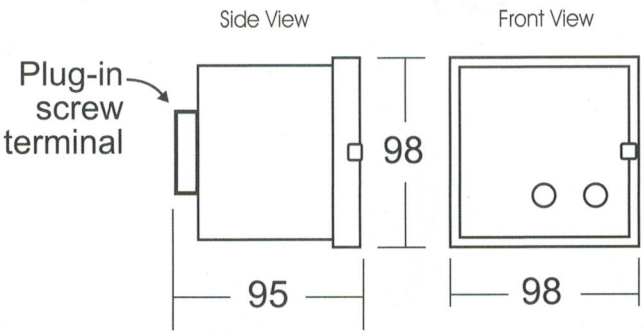

wiring diagram: NV-5 (3P4W)

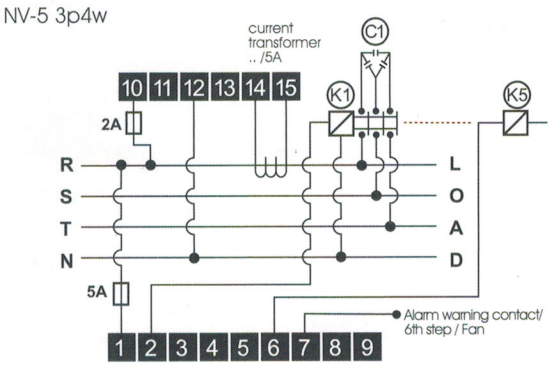

wiring diagram: NV-7 (3P4W)

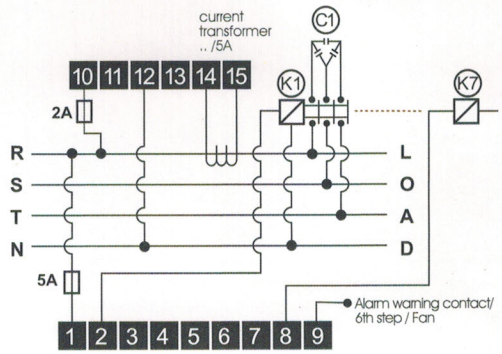

panel cut-out

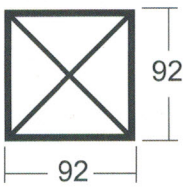

Panel Cut-out : 92 x 92

wiring diagram: NV-5/7 (3P3W)

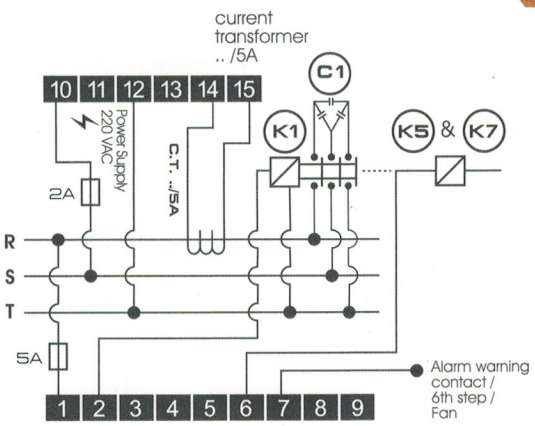

ordering information

Model	Description
NV-5	220 ~ 240 Vac (47~63 Hz)
NV-7	220 ~ 240 Vac (47~63 Hz)

Power Factor Controller

NV-6s/8s/14s

DELAB

features

- Micro Processor Based
- Cos φ and Power Factor Info
- LED Indication for Individual Step
- Auto / Manual Operation
- Automatic Detection of C.T. Polarity
- Automatic C/K Detection
- Automatic Alternate Switching to Utilize Capacitors Evenly
- Secondary Current / THD Info
- Voltage / Frequency Info Display
- THD Monitoring for Current and Voltage
- Minimum Operation @ < 1% Load
- Programmable / Auto Switching Sequence
- Programmable Over Voltage Alarm
- Programmable Software Lock
- Individual Harmonic Spectrum Info up to 11th order for Voltage and Current
- *Alarm Output (Under / Over compensate / Over Voltage)
- *Dedicated Exhaust Fan Output
- Flush Mount

technical data

Power supply	: 240 VAC (± 10%)
Rated current	: ../5A
Rated frequency	: 47 ~ 63 Hz
Operating current	: < 0.05 A
Output relay / Alarm	: 5A / 250 VAC
No voltage release	: < 40 ms
Tripping contact	: SPDT 5A / 240 VAC
Weight	: ~460 g
Operating temp.	: 0° C ~ +55° C
Standard	: IEC : 61000-4-2/4-4/4-5/255-5:1

fundamental frequency

Automatic (47~63 Hz) or selectable 50 or 60 Hz

parameter setting

C / K value	: Auto or 0.02~1.00
Cos φ	: 0.85 (Ind.) ~ 0.95 (Cap.)
Switching program	: Auto or P-0 ~ P-6 or custom
Switching interval	: 2.0 ~ 60.0 sec.
Re-connection time	: OFF or 1~250 sec
(V) > over voltage	: OFF or 240 ~ 270 V
THD (%) Current (I)	: OFF or 20 ~100%
THD (%) Voltage (V)	: OFF or 2.0 ~20.0%

programmable switching sequence

Selection of preset, automatic or customize program sequence.

program sequence

P - 0	Linear
P - 1	1 : 1 : 1 : 1 : 1
P - 2	1 : 2 : 2 : 2 : 2
P - 3	1 : 1 : 2 : 2 : 2
P - 4	1 : 1 : 1 : 2 : 2
P - 5	1 : 2 : 4 : 4 : 4
P - 6	1 : 1 : 2 : 2 : 4

(*) Available for models NV-8s and NV-14s only

casing dimension

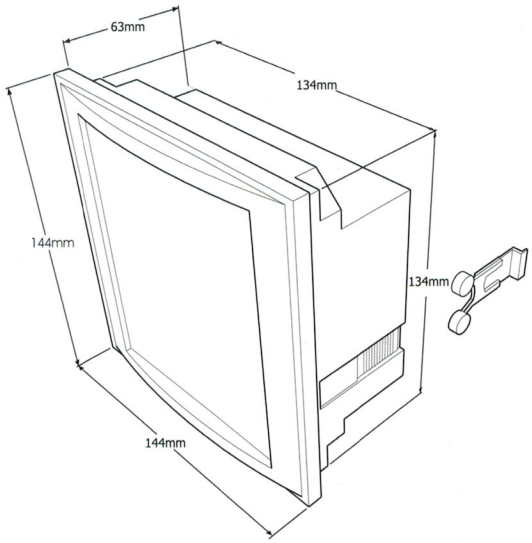

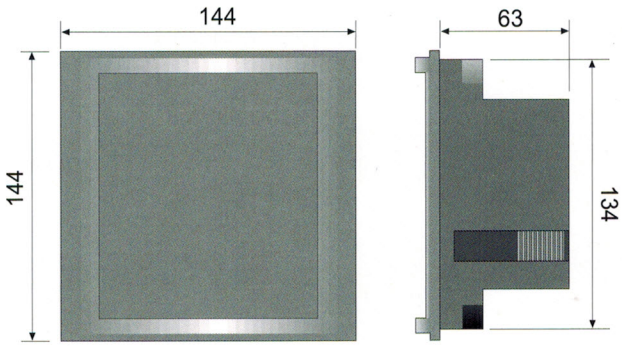

wiring diagram : NV-6s

3P4W

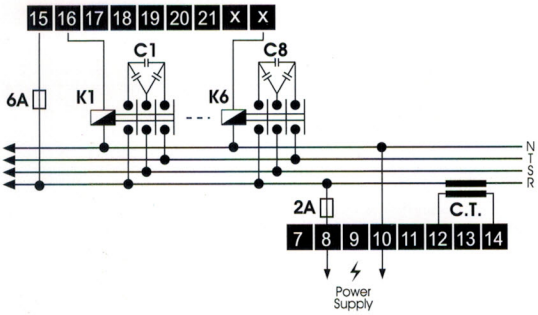

wiring diagram : NV-8s / NV-14s

3P4W

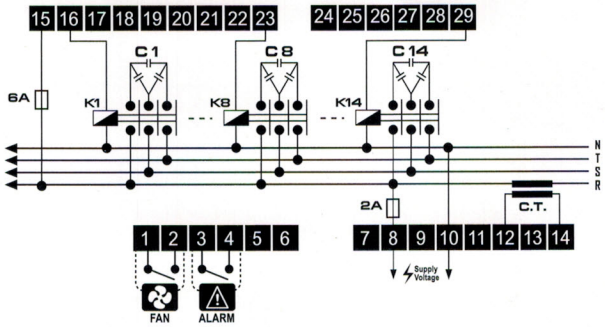

panel cut-out

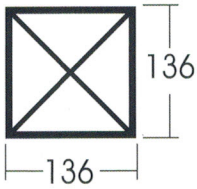

Panel Cut-out : 136 x 136

wiring diagram : NV-8s / NV-14s

3P3W

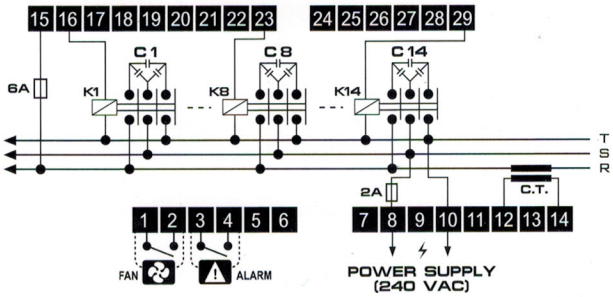

ordering information

Model	Description
NV-6s	220~240 Vac (47~63 Hz)
NV-8s	220~240 Vac (47~63 Hz)
NV-14s	220~240 Vac (47~63 Hz)

Voltage Monitoring Relay

DVS-1000e

DELAB

features

- True RMS Measurement
- Over Voltage Monitoring
- Under Voltage Monitoring
- Phase Failure Monitoring
- Trip LED Indicator
- Adjustable Over / Under Voltage Settings
- Adjustable Trip Delay
- Auto-reset
- Din-railed Mount

technical data

Measurement	True RMS Ampere
Rated voltage supply	AC220V, AC230V, AC240V (3 phase 4 wire) AC380V, AC400V, AC415V (3 phase 3 wire)
Rated frequency	50 ~ 60 Hz
U > threshold range	(1.05 ~ 1.30)*Ue
U < threshold range	(0.70 ~ 0.95)*Ue
Voltage hysteresis	3 phase 4 wire: 3.5V ; 3 phase 3 wire: 6V
Trip delay	0.1 ~ 10 sec
Phase failure sensitivity	0.5*Ue
Voltage measurement error	<1% (over the whole range)
Time delay error	±10%, + 0.1sec
Knob setting accuracy	1% of the full scale
Rated insulation voltage	420V
Rated fuse rating	RT36-00 5A
Output Contact	1 C/O contact
Pollution degree	3
Electrical life	10^5
Mechanical life	10^6
Conventional thermal current	5A
Usage category	AC-15
Contact capacity	Ue/Ie:240V/1.5A, 415V/0.95A
Max. power consumption	2VA
Wiring size	$0.5mm^2$ ~ $2.5mm^2$
Tightening torque	0.5Nm
Altitude	≤ 2000m
Operating temp.	-5° C ~ +40° C
Relativity humidity	≤50% at 40° C (without condensation)
Storage temp.	-20° C ~ +50° C
Enclosure Protection	IP20
Weight	~ 95g
Mounting	DIN Rail mount or Screw mount
Standard	EN/IEC 60947-5-1

parameter setting

Over Voltage Setting :
250 Vac~310 Vac +1%, (3 phase 4 wire)
430 Vac~530 Vac +1%, (3 phase 3 wire)

Under Voltage Setting :
170 Vac~230 Vac +1%, (3 phase 4 wire)
290 Vac~390 Vac +1%, (3 phase 3 wire)

Delay Time Setting :
0.1sec~10.0 sec +1%, (Over/Under Voltage)
2.0 s Fixed, (asymmetry trip)
< 1.0 sec, (phase failure/phase seq. trip)

monitoring characteristics

Over Voltage Indication :
LED "U>" lit up, LED "Normal" unlit.

Under Voltage indication :
LED "U<" lit up, LED "Normal" unlit.

Phase Failure Indication :
Both LED "U>"& LED "U<" will lit up (Phs.Fail.), LED "Normal" unlit.

auto-reset activation

Over Voltage :
< 6Vac of Ue> (3 phase 3 wire)
< 3.5Vac of Ue> (3 phase 4 wire)

Under Voltage :
> 6Vac of Ue< (3 phase 3 wire)
> 3.5Vac of Ue< (3 phase 4 wire)

**Specification subject to change without prior notification (please visit www.delab.com.my for latest specification)*

panel description

LED 1: Indication for phase failure
LED 2: Indication for normal state (no faults)
LED 3: Indication for overvoltage fault
LED 4: Indication for undervoltage fault

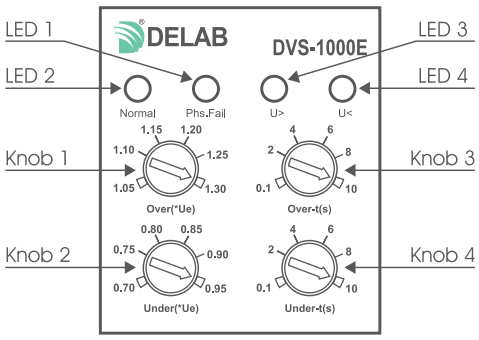

Knob 1: Adjustment of overvoltage threshold Umax
Knob 2: Adjustment of undervoltage threshold Umin
Knob 3: Adjustment of overvoltage trip delay
Knob 4: Adjustment of undervoltage trip delay

casing dimension

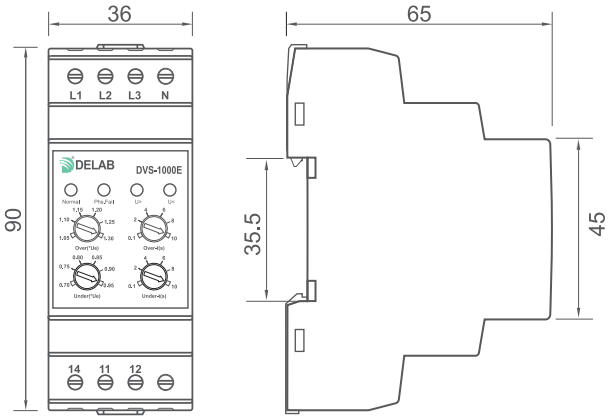

wiring diagram

3 phase 3 wire

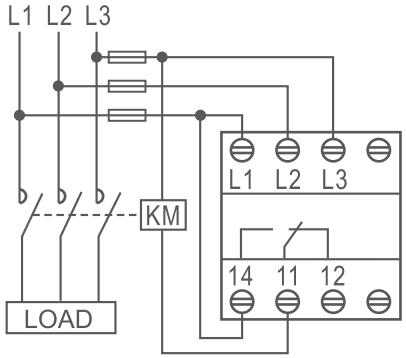

3 phase 4 wire

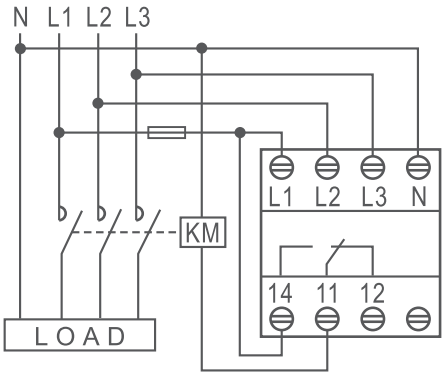

function diagram

Phase failure and phase sequence monitoring

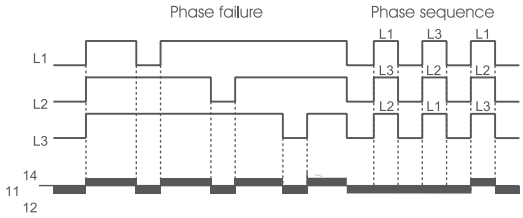

Overvoltage and undervoltage monitoring

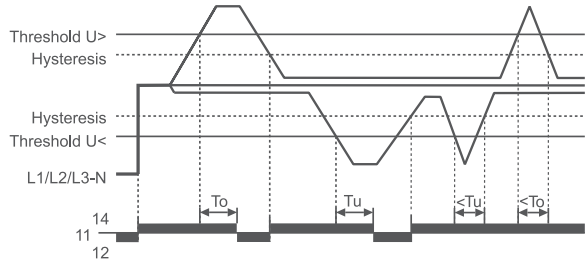

To: Overvoltage trip delay
Tu: Undervoltage trip delay

ordering information

Model	Description
DVS -1000e - M220	AC 220V (3 phase 4 wire)
DVS -1000e - M380	AC 380V (3 phase 3 wire)

Note: All measurement in mm.

voltage monitoring relay

DELAB

Voltage Monitoring Relay

DVS-1000

DELAB

features

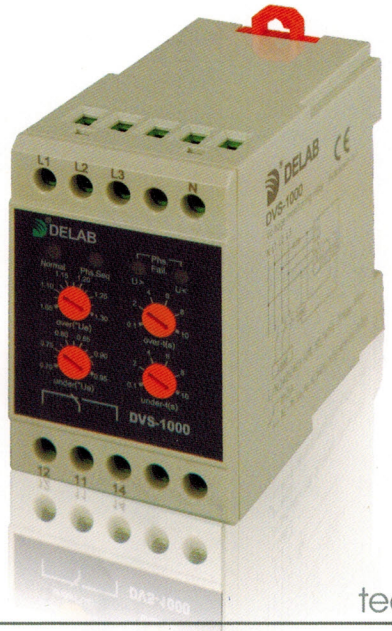

- True RMS Measurement
- Over Voltage Monitoring
- Under Voltage Monitoring
- Phase Asymmetry Monitoring
- Phase Failure Monitoring
- Phase Sequence Monitoring
- Trip LED Indicator
- Adjustable Over / Under Voltage Settings
- Adjustable Trip Delay
- Auto-reset
- Din-railed Mount

technical data

Measurement	True RMS Ampere
Rated voltage supply	AC220V, AC230V, AC240V (3 phase 4 wire) AC380V, AC400V, AC415V (3 phase 3 wire)
Rated frequency	50 ~ 60 Hz
U > threshold range	(1.05 ~ 1.30)*Ue
U < threshold range	(0.70 ~ 0.95)*Ue
Asymmetry threshold	10%
Voltage hysteresis	3 phase 4 wire: 3.5V ; 3 phase 3 wire: 6V
Trip delay	0.1 ~ 10 sec
Asymmetry hysteresis	25% Asymmetry setting value
Phase failure sensitivity	0.5*Ue
Voltage measurement error	<1% (over the whole range)
Time delay error	±10%, + 0.1sec
Knob setting accuracy	1% of the full scale
Rated insulation voltage	420V
Rated fuse rating	RT36-00 5A
Output Contact	1 C/O contact
Pollution degree	3
Electrical life	10^5
Mechanical life	10^6
Conventional thermal current	5A
Usage category	AC-15
Contact capacity	Ue/Ie:240V/1.5A, 415V/0.95A
Wiring size	$0.5mm^2$ ~ $2.5mm^2$
Tightening torque	0.5Nm
Altitude	≤ 2000m
Operating temp.	-5° C ~ +40° C
Relativity humidity	≤50% at 40° C (without condensation)
Storage temp.	-20° C ~ +50° C
Enclosure Protection	IP20
Weight	~ 190g
Mounting	DIN Rail mount or Screw mount
Standard	EN/IEC 60947-5-1

parameter setting

Over Voltage Setting :
250 Vac~310 Vac +1%, (3 phase 4 wire)
430 Vac~530 Vac +1%, (3 phase 3 wire)

Under Voltage Setting :
170 Vac~230 Vac +1%, (3 phase 4 wire)
290 Vac~390 Vac +1%, (3 phase 3 wire)

Delay Time Setting :
0.1sec~10.0 sec +1%, (Over/Under Voltage)
2.0 s Fixed, (asymmetry trip)
< 1.0 sec, (phase failure/phase seq. trip)

monitoring characteristics

Over Voltage Indication :
LED "U>" lit up, LED "Normal" unlit.

Under Voltage indication :
LED "U<" lit up, LED "Normal" unlit.

Asymmetry Indication :
Both LED "U>"& LED "U<" will flash,
LED "Normal" unlit.

Phase Failure Indication :
Both LED "U>"& LED "U<" will lit up (Phs.Fail.),
LED "Normal" unlit.

Wrong Phase Sequence Indication :
LED "Phs.Seq" will lit up, LED "Normal" unlit.

auto-reset activation

Over Voltage :
< 6Vac of Ue> (3 phase 3 wire)
< 3.5Vac of Ue> (3 phase 4 wire)

Under Voltage :
> 6Vac of Ue< (3 phase 3 wire)
> 3.5Vac of Ue< (3 phase 4 wire)

Phase Asymmetry :
Phase voltage difference must not exceed 10%

panel description

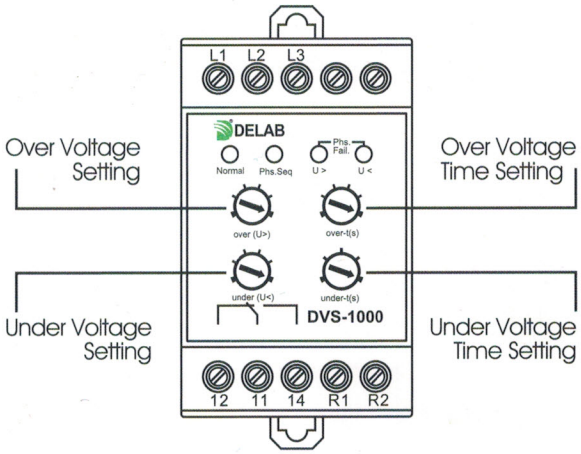

casing dimension

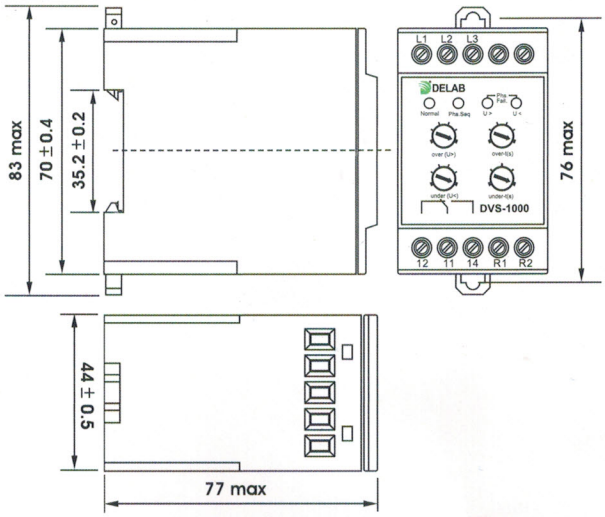

wiring diagram

3 phase 4 wire

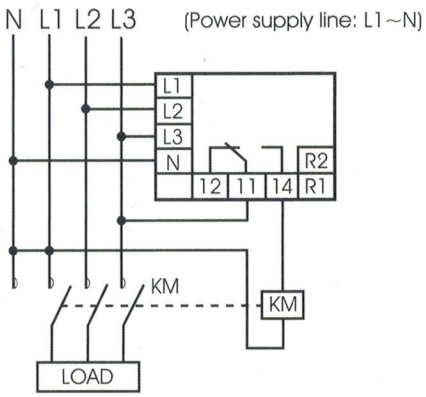

3 phase 3 wire

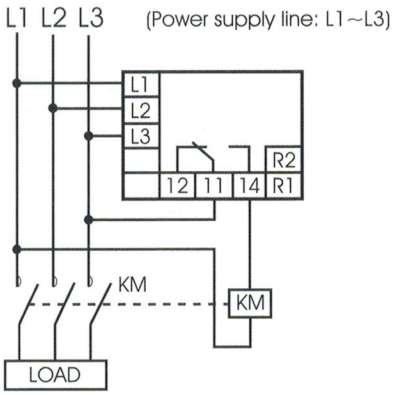

function diagram

Phase asymmetry, phase failure, phase sequence monitoring

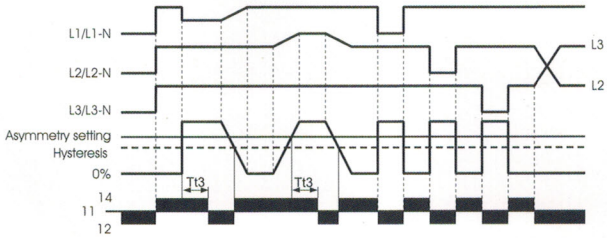

Overvoltage and undervoltage monitoring

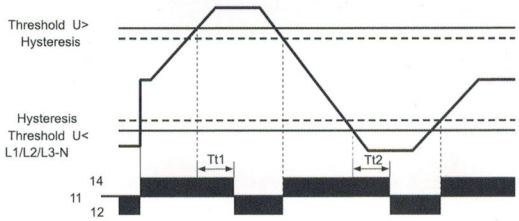

Tt1: Overvoltage time delay
Tt2: Undervoltage time delay
Tt3: Asymmetry time delay

ordering information

Model	Description
DVS-1000-M220	AC 220V (3 phase 4 wire)
DVS-1000-M240	AC 240V (3 phase 4 wire)
DVS-1000-M380	AC 380V (3 phase 3 wire)
DVS-1000-M415	AC 415V (3 phase 3 wire)

Voltage Monitoring Relay

DVS-2000

DELAB

features

- True RMS Measurement
- Over / Under Voltage Monitoring
- Phase Asymmetry Monitoring
- Phase Sequence Monitoring
- Phase Failure Monitoring
- Adjustable Over / Under Voltage Setting
- Adjustable Trip Delay
- Real Time L-L Voltage & Fault Display
- LCD Backlit Display
- Test Trip Function
- Selectable Auto / Manual Reset Function
- Adjustable Start / Reset Time Delay
- Din-railed Mount

technical data

Measurement	True RMS Ampere
Rated voltage supply	M240 (3 phase 4 wire) : AC125V~AC300V M415 (3 phase 3 wire) : AC200V~AC500V
Rated frequency	50 ~ 60 Hz
Voltage hysteresis	M240 (3 phase 4 wire) : 5V M415 (3 phase 3 wire) : 6V
Time for phase failure & incorrect phase sequence	≤ 0.2 sec
Voltage measurement error	<1% (over the whole range)
Time delay error	± 1%, + 0.1sec
Rated insulation voltage	415V
Rated fuse rating	RT36-00 5A
Pollution degree	3
Electrical life	10^5
Mechanical life	10^6
Contact capacity	Lth:5A ; AC-15: AC240V/1.5A, AC415V/0.95A
Altitude	≤ 2000m
Operating temp.	-5° C ~ +40° C
Relativity humidity	≤50% at 40° C (without condensation)
Storage temp.	-25° C ~ +50° C
Enclosure Protection	IP20
Weight	~ 95g
Mounting	DIN Rail mount
Standard	EN/IEC 60947-5-1

parameter setting

Over Voltage:
Step adjustment : 1V
OFF or 221V~300V (3 phase 4 wire)
OFF or 381V~500V (3 phase 3 wire)

Under Voltage:
Step adjustment :1V
OFF or 150V~219V (3 phase 4 wire)
OFF or 260V~379V (3 phase 3 wire)

Delay Time:
Step adjustment : 0.1 sec
(Over / Under Voltage / Asymmetry)
0.1~20 sec

Asymmetry:
OFF or 5~20%

Phase sequence:
ON or OFF

Start/Reset delay:
0.3~30 sec

Auto-reset:
ON or OFF

panel description

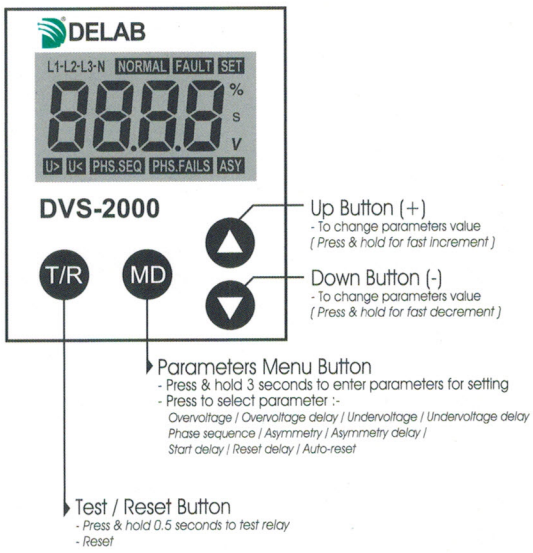

casing dimension

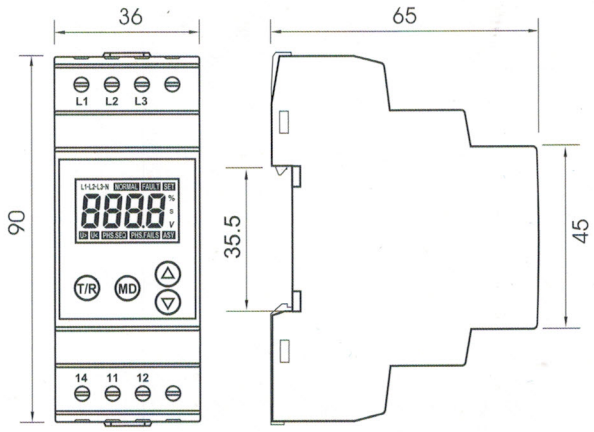

wiring diagram

3 phase 3 wire

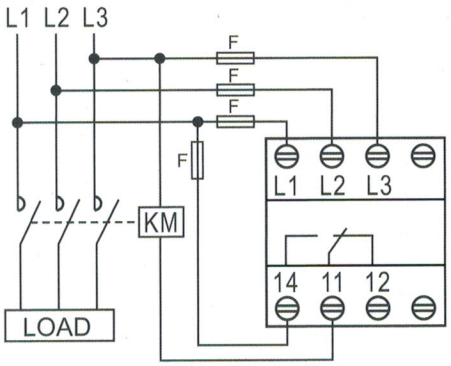

3 phase 4 wire

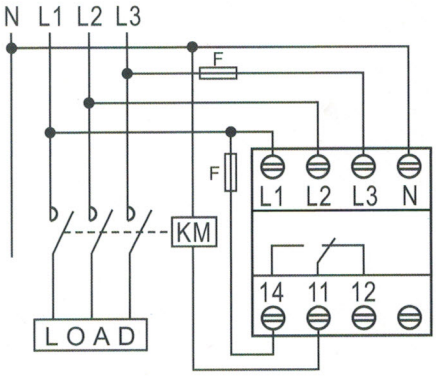

function diagram

Phase asymmetry monitoring

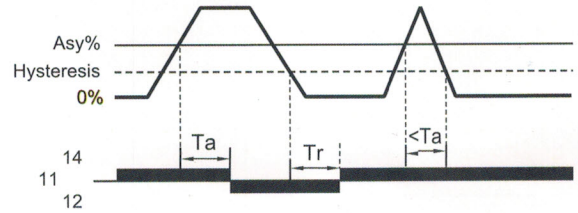

Phase failure and phase sequence monitoring

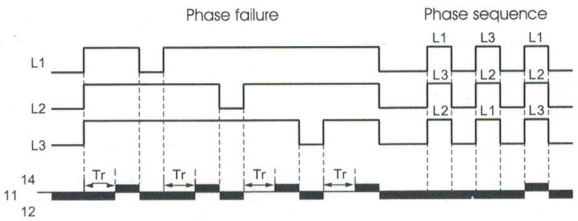

Overvoltage and undervoltage monitoring

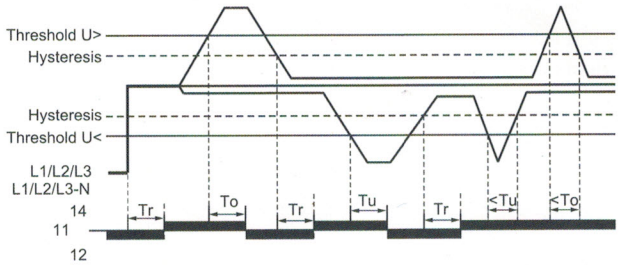

Ta: Asymmetry time delay
To: Overvoltage time delay
Tr : Start / Reset time delay
Tu: Undervoltage time delay

ordering information

Model	Description
DVS-2000-M240	AC 125V~AC300V ±10% (3 phase 4 wire)
DVS-2000-M415	AC 200V~AC500V ±10% (3 phase 3 wire)

Weekly Digital Time Switch

DTS-100
101
102

DELAB

features

- Digital Time Switch with Weekly Program
- *LCD Display with Backlight
- Holiday Mode
- Single / **Double Channel
- 5 or ***10 Years Power Reserve (lithium battery)
- 40 Programs / ****100 Programs
- Sealable Front Cover
- Single / Double Channel
- Manual Control by Keys Combination
- Automatic Transfer of Weekdays
- Double Module
- Din-rail Mount (TH-35 rail)

technical data

Model	DTS-100	DTS-101	DTS-102
Supply terminals	L-N		
Rated voltage	AC220~240 ±10%	AC/DC 24~264V ±10%	
Rated frequency	50/60 Hz		
Power consumption	1W		2W
Number of programs	40		100
Program	weekly / daily		
Mode of work	manual , automatic , holiday		
Summer/winter time	off , automatic changes		
Time tolerance	≤1s/day at 25° C		
Power reserve	5 yrs	10 yrs	
Data readout	LCD display	LCD display with backlit	
Number of contacts	1 C/O		2 C/O
Current of contacts	16A/250V AC1		
Switching capacity	4000VA/AC1, 384W/DC		
Mechanical life	10^6		
Electrical life	10^5		
Rated insulation voltage	250V		
Protection degree	IP20		
Pollution degree	3		
Altitude	≤ 2000m		
Ambient temperature	-20° C ~ +55° C		
Permissable relative humidity	≤ 50% (40° C, without condensation)		
Storage temperature	-30° C ~ +70° C		
Wire size	$1mm^2$ ~ $4mm^2$		
Tightening torque	0.5 Nm		
Mounting	TH-35 Rail (EN60715)		
Weight	approx. 210 g		
Enclosure Protection	IP20		
Standard	EN 60730-1/ EN 60730-2-7		

(*) DTS-101/102 (**) DTS-102 (***) DTS-101/102 (****) DTS-102

Specification subject to change without prior notification (please visit www.delab.com.my for latest specification)

panel description

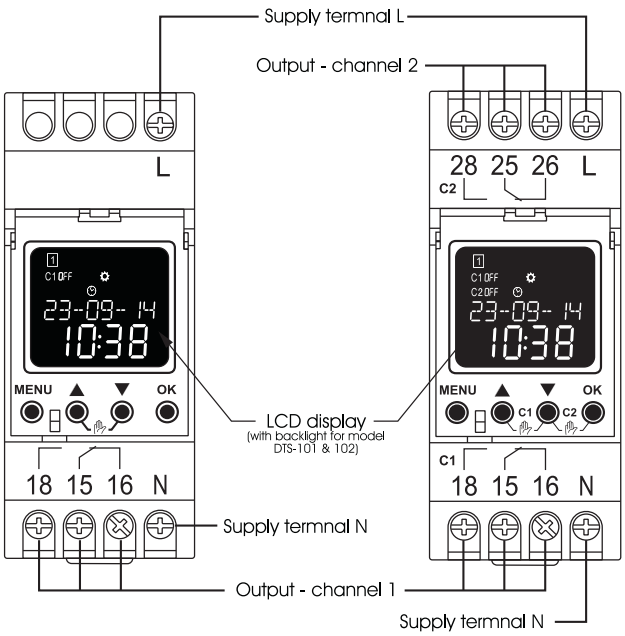

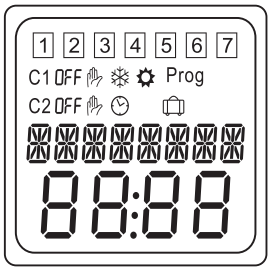

1 2 3 4 5 6 7	Days of the week Monday, Tuesday....Sunday
C1	Channel 1
C2	Channel 2 (for model DTS-102)
	OFF Activate
	OFF Deactivate
	Automatic mode
	Manual mode
	Holiday mode
	Winter mode
	Summer mode
Prog	Program setting

wiring diagram

DTS-100 / 101

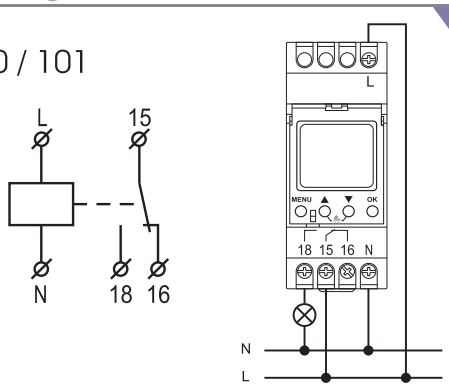

DTS-102

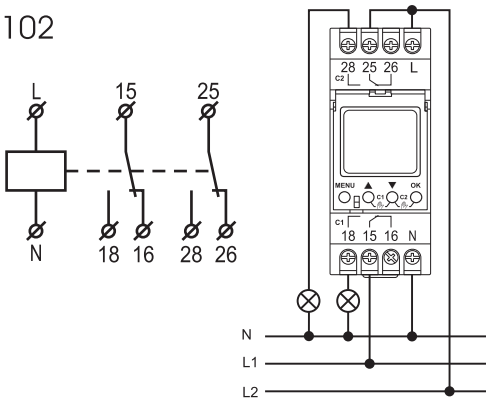

casing dimesion

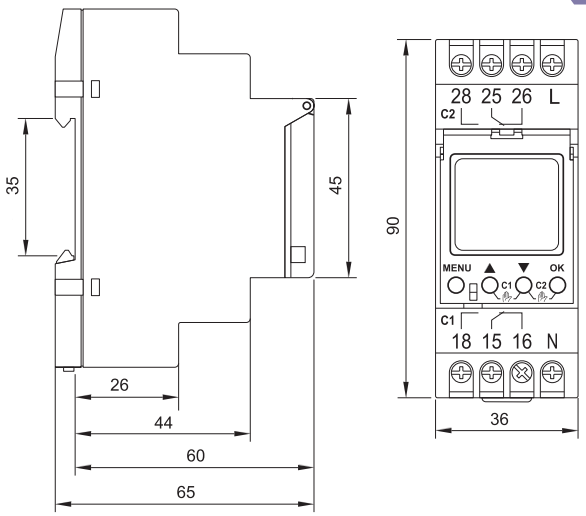

ordering information

Model	Description
DTS-100	220~240 Vac
DTS-101	24~264 Vac / dc
DTS-102	24~264 Vac / dc

Note: All measurement in mm.

weekly digital time switch

DELAB